KORG®

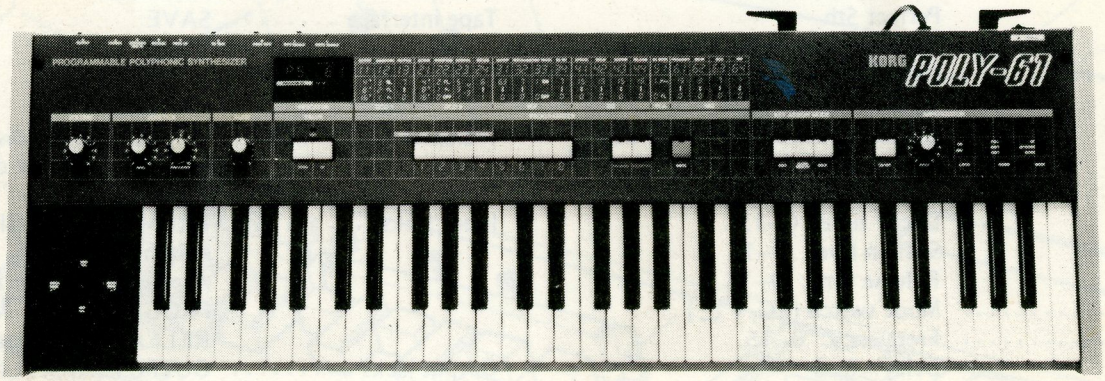

PROGRAMMABLE POLYPHONIC SYNTHESIZER SERVICE MANUAL

POLY-61

CONTENTS

1. SPECIFICATIONS 1
2. STRUCTURAL DIAGRAM 2
3. BLOCK DIAGRAM 4
4. CIRCUIT DIAGRAM 5
5. REFERENCE DATA 9
6. PC BOARD 10
7. SETTING CHARTS 18
8. CHECK AND ADJUSTMENT PROCEDURE 19
9. PARTS LIST 25

KEIO ELECTRONIC LABORATORY CORPORATION
TOKYO/JAPAN

1. SPECIFICATIONS

Keyboard	61 keys (C-C)

(Module parameters)

DCO1*	Octave switch (16', 8', 4') Waveform (◺, PW, PWM) Pulse width, PWM depth
DCO2*	Octave switch (16', 8', 4') Waveform (◺, ⊓, OFF) Interval: Unison, Minor 3rd, Major 3rd, Perfect 4th, Perfect 5th Detune: 1–6 (max. 50 cents)
VCF*	Cutoff frequency: 0–63 Resonance: 0–7 Keyboard tracking: OFF, FULL EG modulation intensity: 0–7
EG*	Attack time: 0–15 Decay time: 0–15 Sustain level: 0–15 Release time: 0–15
VCA*	Mode switch (EG, ⊓)
MG*	Frequency: 0–15 Delay: 0–3 DCO modulation depth: 0–7 VCF modulation depth: 0–7
Key assign modes	Poly Chord memory Hold
Arpeggiator	ON/OFF Speed Latch (ON/OFF) Range (FULL, 2 Octave, 1 Octave) Mode (UP, UP/DOWN, DOWN)

(Panel controls)

Tune	±100 cents
Joystick	Pitch bend range: max. ±700 cents MG frequency X: pitch bends, Y+: vibrato, Y–: wah-wah
Volume	Adjustable
Tape interface	SAVE LOAD VERIFY CANCEL
Indicator	Program number display Parameter number display Value display
Input jacks	FROM TAPE (HIGH/LOW switch) Arpeggiator trigger in (⊓ GND) PROGRAM UP (⊓ GND) RELEASE (⊓ GND)
Output jacks	OUTPUT (HIGH/LOW switch) HEADPHONE TO TAPE (HIGH/LOW switch)
Tape switch	ENABLE/DISABLE
WRITE switch	ENABLE/DISABLE
Dimensions	985(W) x 350(D) x 110(H) mm
Weight	12 kg
Supplied accessories	Data cassette, Connection cord, Plug adaptor
Power consumption	28 W
Operating temperature	0–40°C

* Programming and editing available.

2. STRUCTURAL DIAGRAM

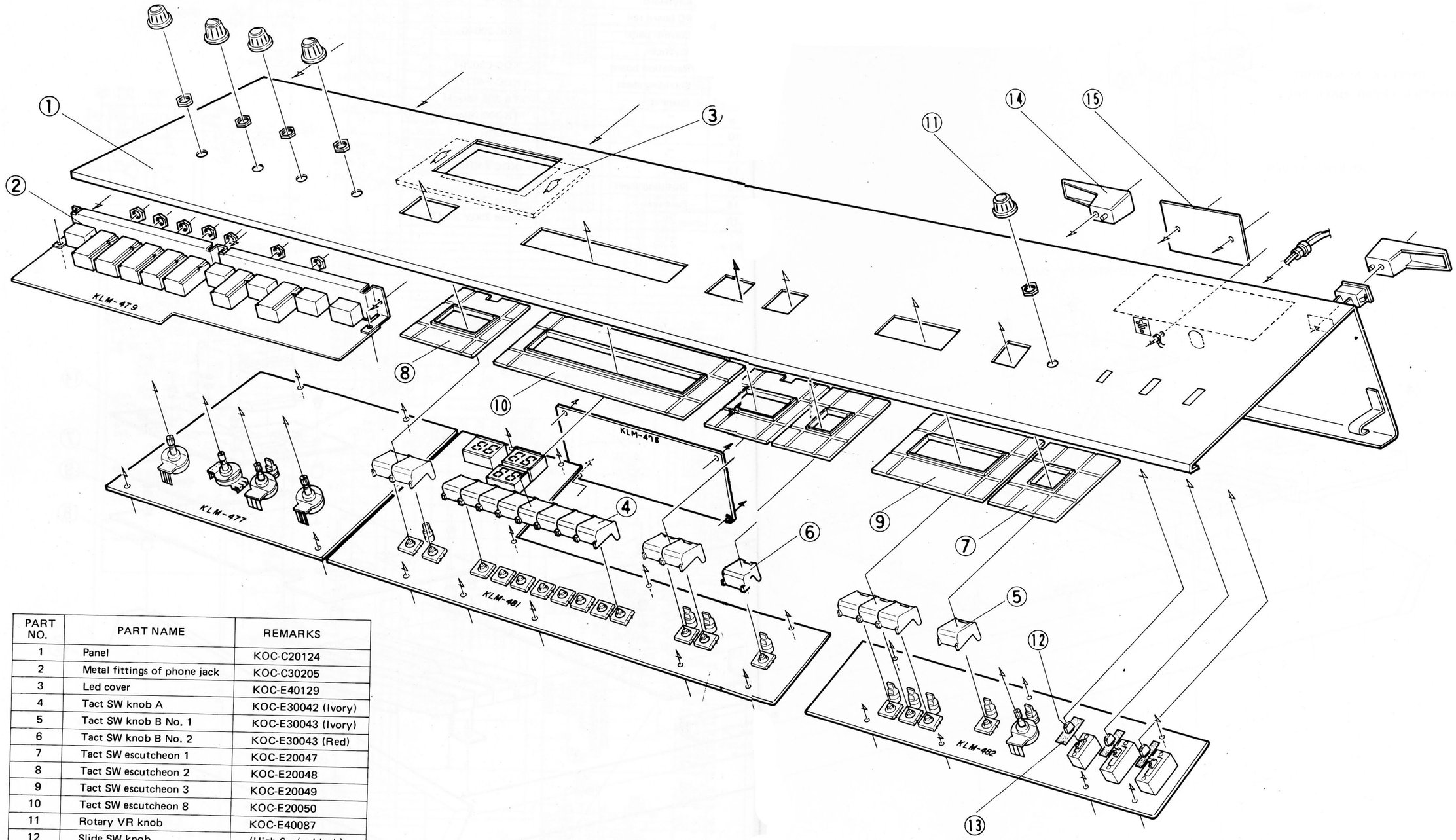

PART NO.	PART NAME	REMARKS
1	Panel	KOC-C20124
2	Metal fittings of phone jack	KOC-C30205
3	Led cover	KOC-E40129
4	Tact SW knob A	KOC-E30042 (Ivory)
5	Tact SW knob B No. 1	KOC-E30043 (Ivory)
6	Tact SW knob B No. 2	KOC-E30043 (Red)
7	Tact SW escutcheon 1	KOC-E20047
8	Tact SW escutcheon 2	KOC-E20048
9	Tact SW escutcheon 3	KOC-E20049
10	Tact SW escutcheon 8	KOC-E20050
11	Rotary VR knob	KOC-E40087
12	Slide SW knob	(High 6m/m black)
13	Slide SW mask	KOC-F40222
14	Cord stopper	KOC-E40099 (black)
15	Model number plate	KOC-C40424

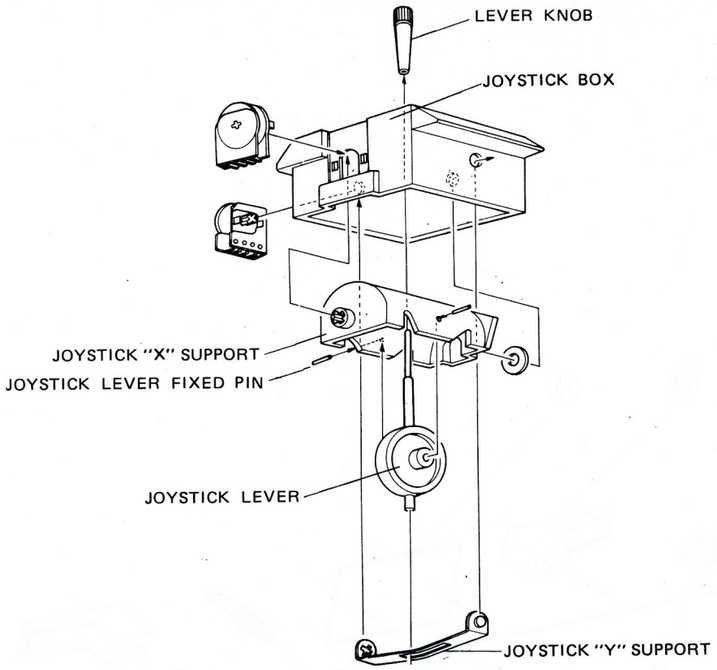

PART NO.	PART NAME	REMARK
1	Wooden case	KOC-D10014
2	Keyboard	ESK-70
3	PC board rail	
4	Control panel	KOC-20040
5	Joystick	
6	Radiation board	KOC-C30207
7	Shielding sheet	KOC-F40227
8	Bushing	TA-305 (Black)
9	"	TB-300 (Black)
10	"	TA-310
11	"	TB-300
12	Felt	KOC-F40186
13	Shielding sheet	
14	Fuse seal	Fuse 250V 1A (T1A)
15	"	Fuse 250V 2A (T2A)

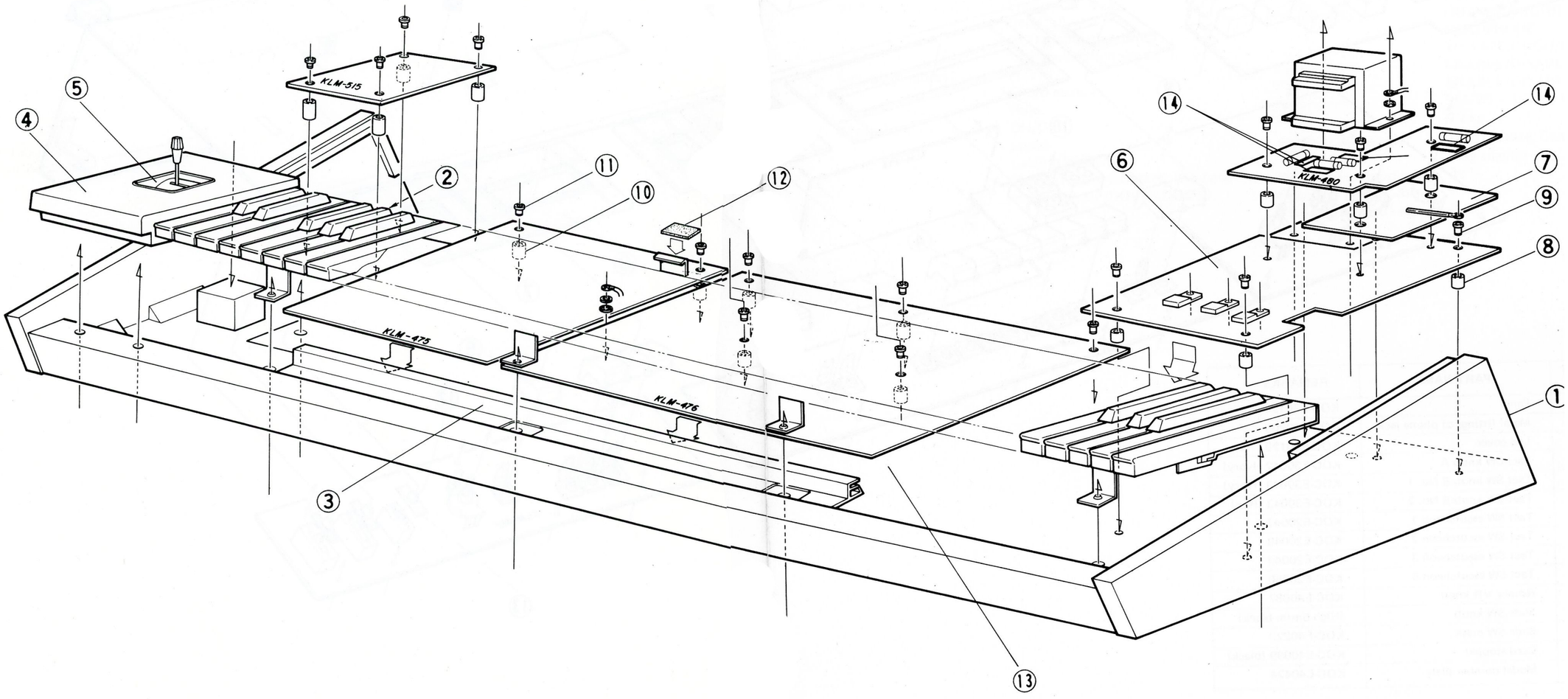

3. BLOCK DIAGRAM

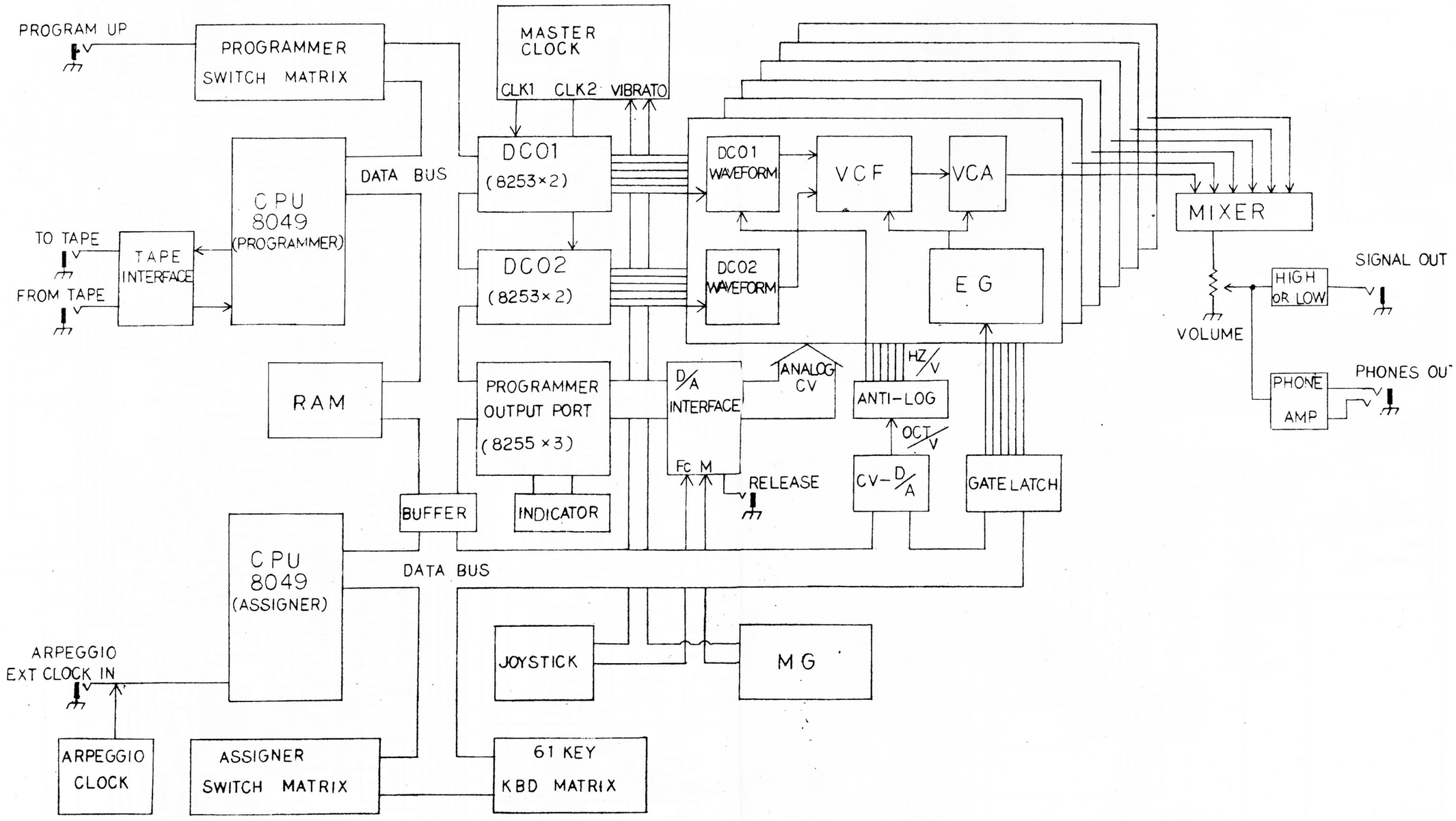

4. CIRCUIT DIAGRAM

KLM-475 (OLD PRODUCTION)

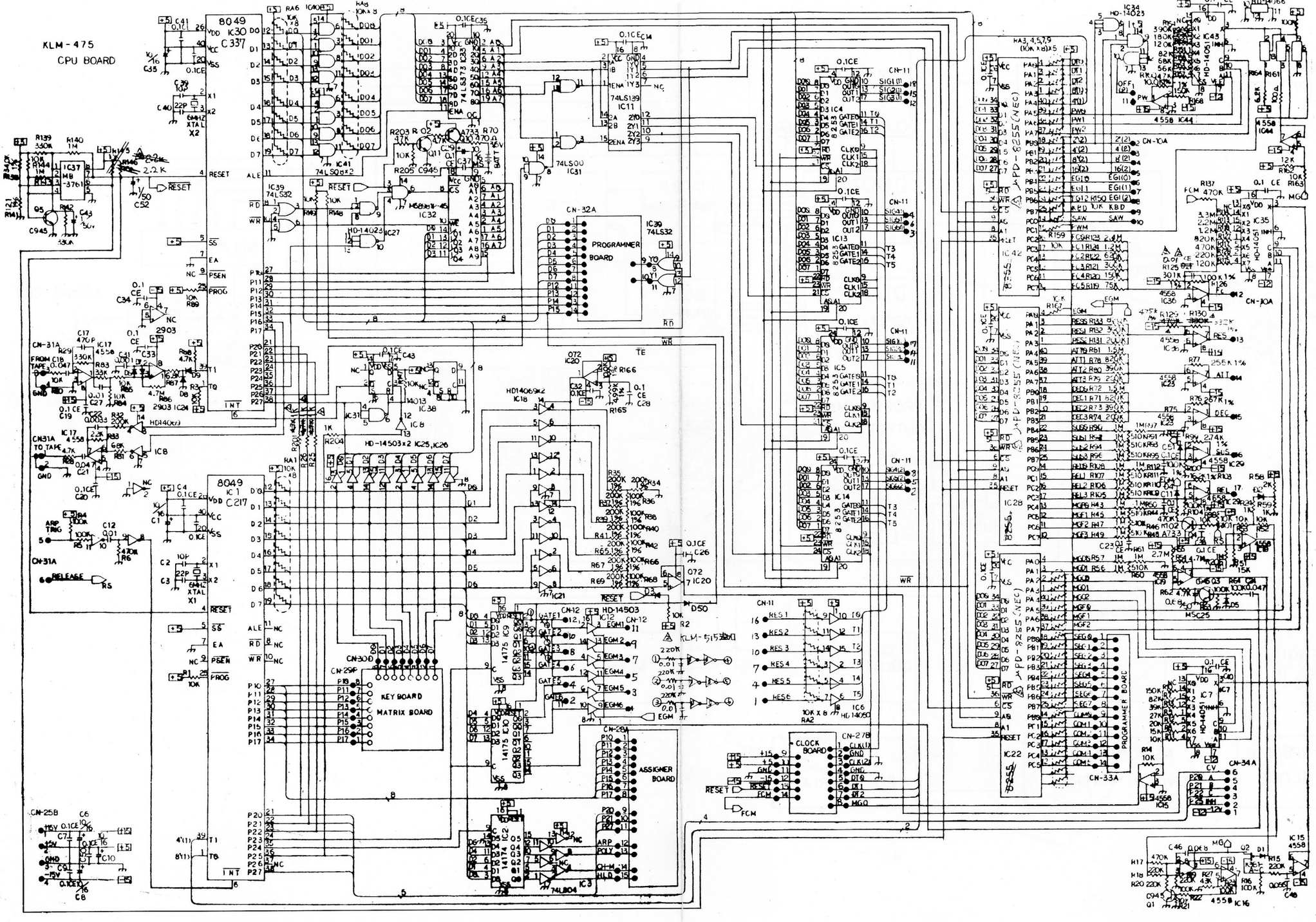

KLM-509 (NEW PRODUCTION)

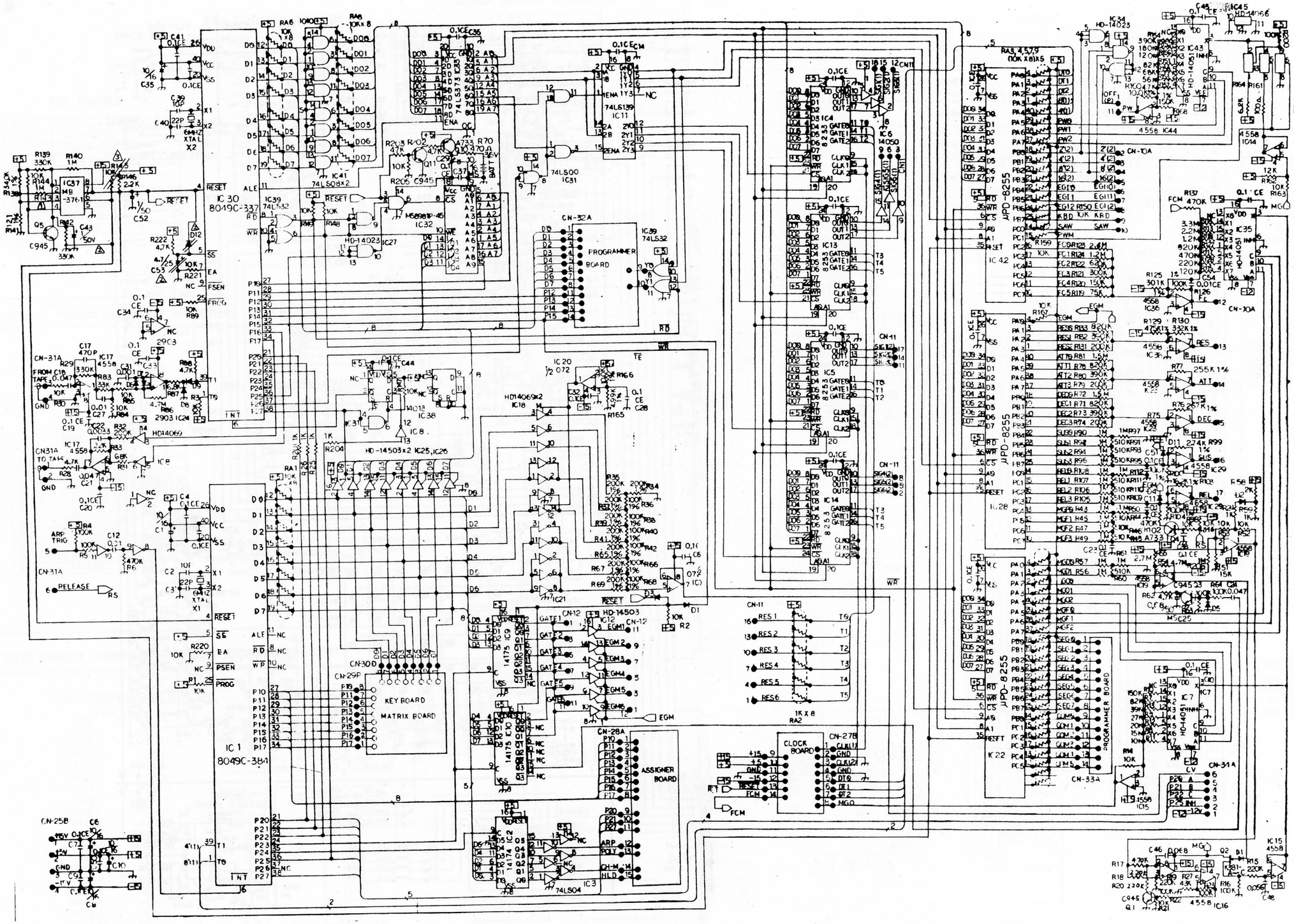
IC 1
8049C-384
IC 30
8049C-337
PROGRAMMER BOARD
KEY BOARD MATRIX BOARD
ASSIGNER BOARD
CLOCK BOARD
PROGRAMMER BOARD
CN-30D
CN-29P
CN-28A
CN-32A
CN-31A
CN-25B
CN-27B
CN-33A
CN-34A
CN-10A
CN-11
CN-12
IC 20
½ 072
IC 8
IC 11
IC 12
IC 13
IC 14
IC 22
IC 42
IC 44
IC 16
IC 29
IC 31
IC 32
IC 35
IC 36
IC 38
RA1
RA2
RA3,4,5,7,9
(10K X8)X5
RA6
10K X 8
1K X 8
μPD-8255
HD-14503x2 IC25,IC26
HD14069x2
IC18
IC17
4558
IC27
IC41
74LS08x2
74LS32
74LS00
74LS139
IC31
HD-14023
HD-14066
HD-14051
HD-14503
IC39
74LS32
IC34
HD-14023
IC45
HD-14066
IC35
HD-14051
IC7
HD-14051
IC15
4558
IC16
4558
IC29
4558
IC44
4558
IC36
4558
IC35
4558

KLM-476, 477, 478, 479, 481, 482 (OLD PRODUCTION)

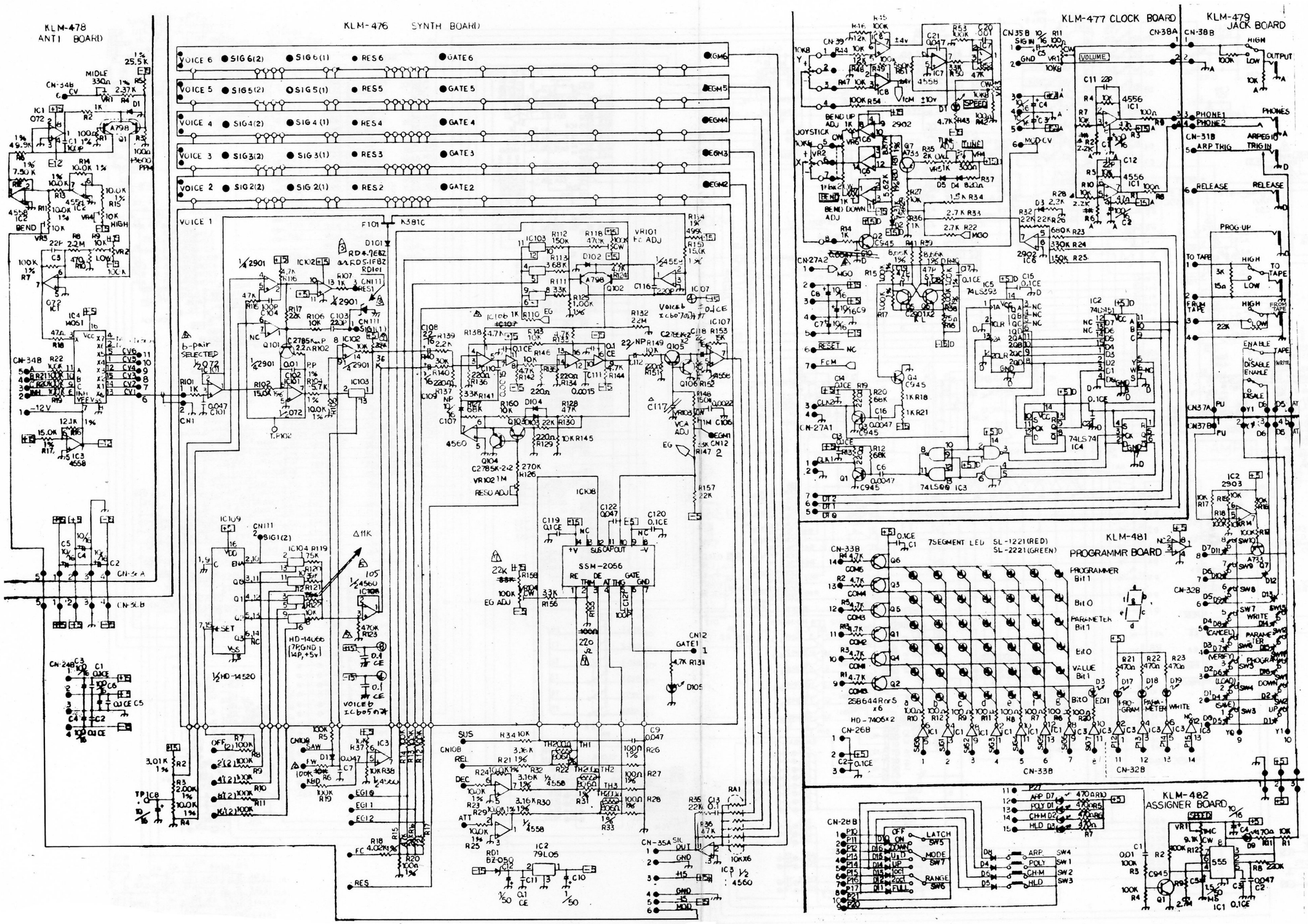

KLM-508, 477, 479, 481, 482 (NEW PRODUCTION)

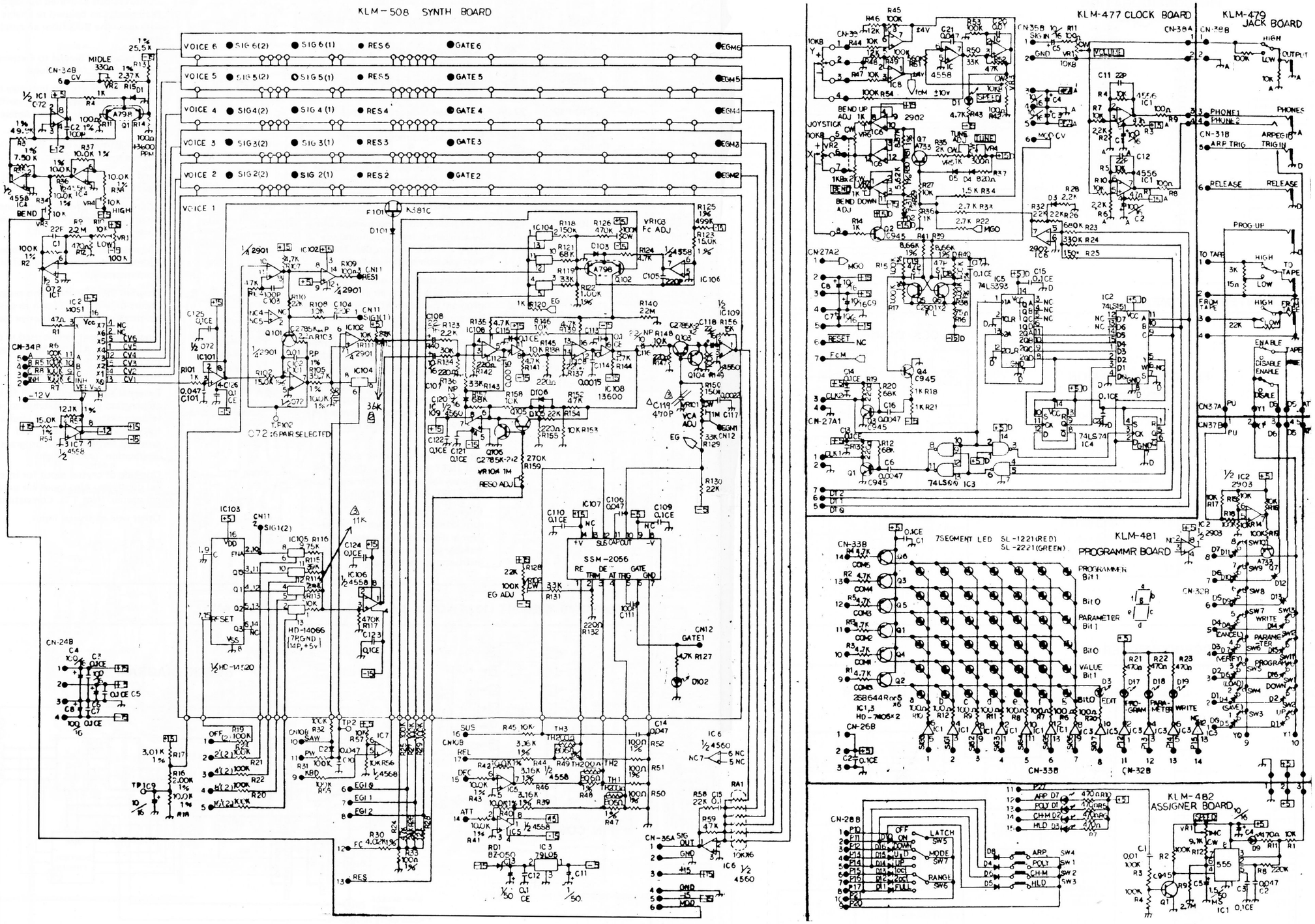

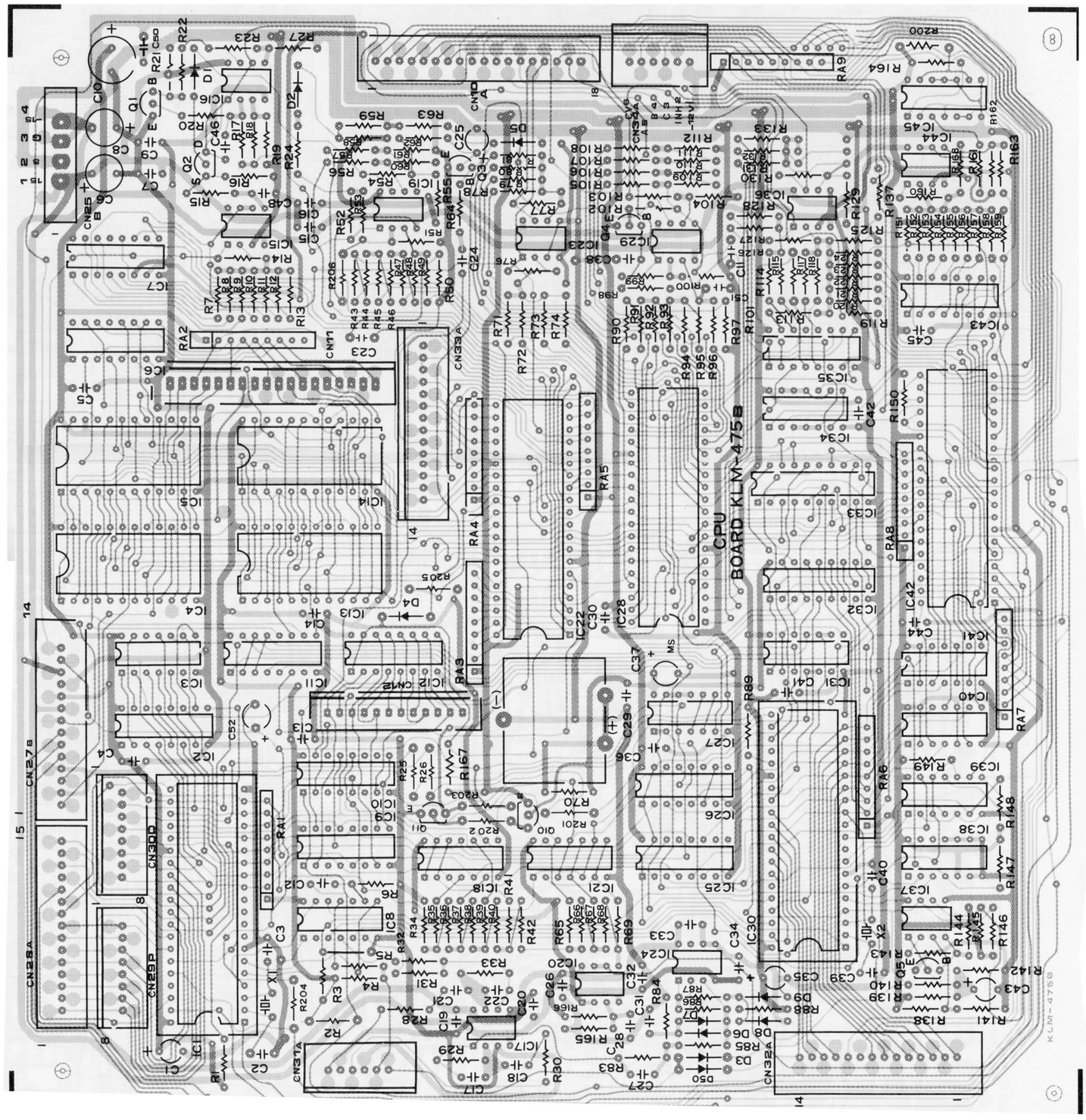
CPU BOARD KLM-475B
KJM-4758

KLM-476

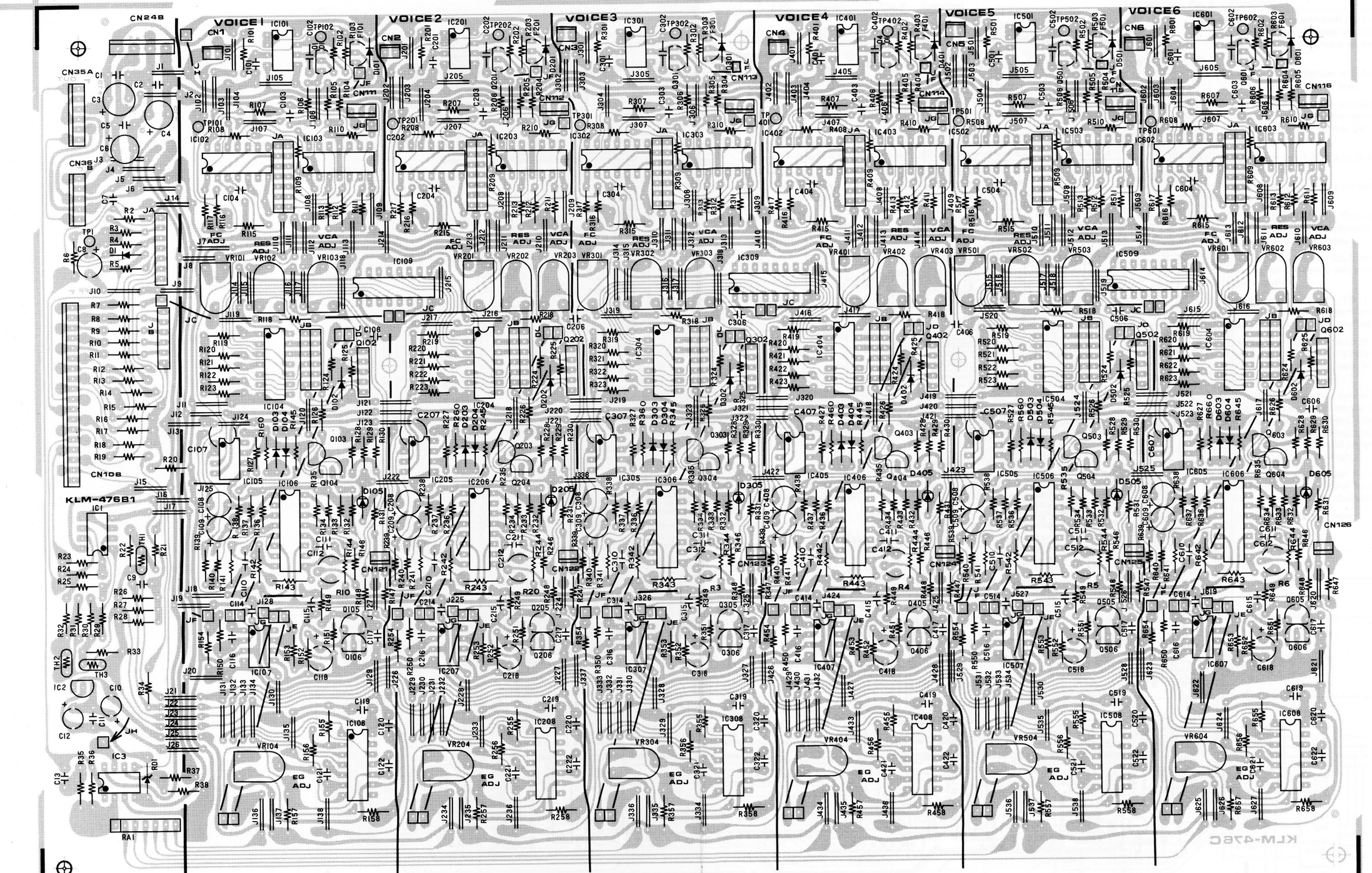
VOICE1
VOICE2
VOICE3
VOICE4
VOICE5
VOICE6
KLM-476B1
KLM-476C

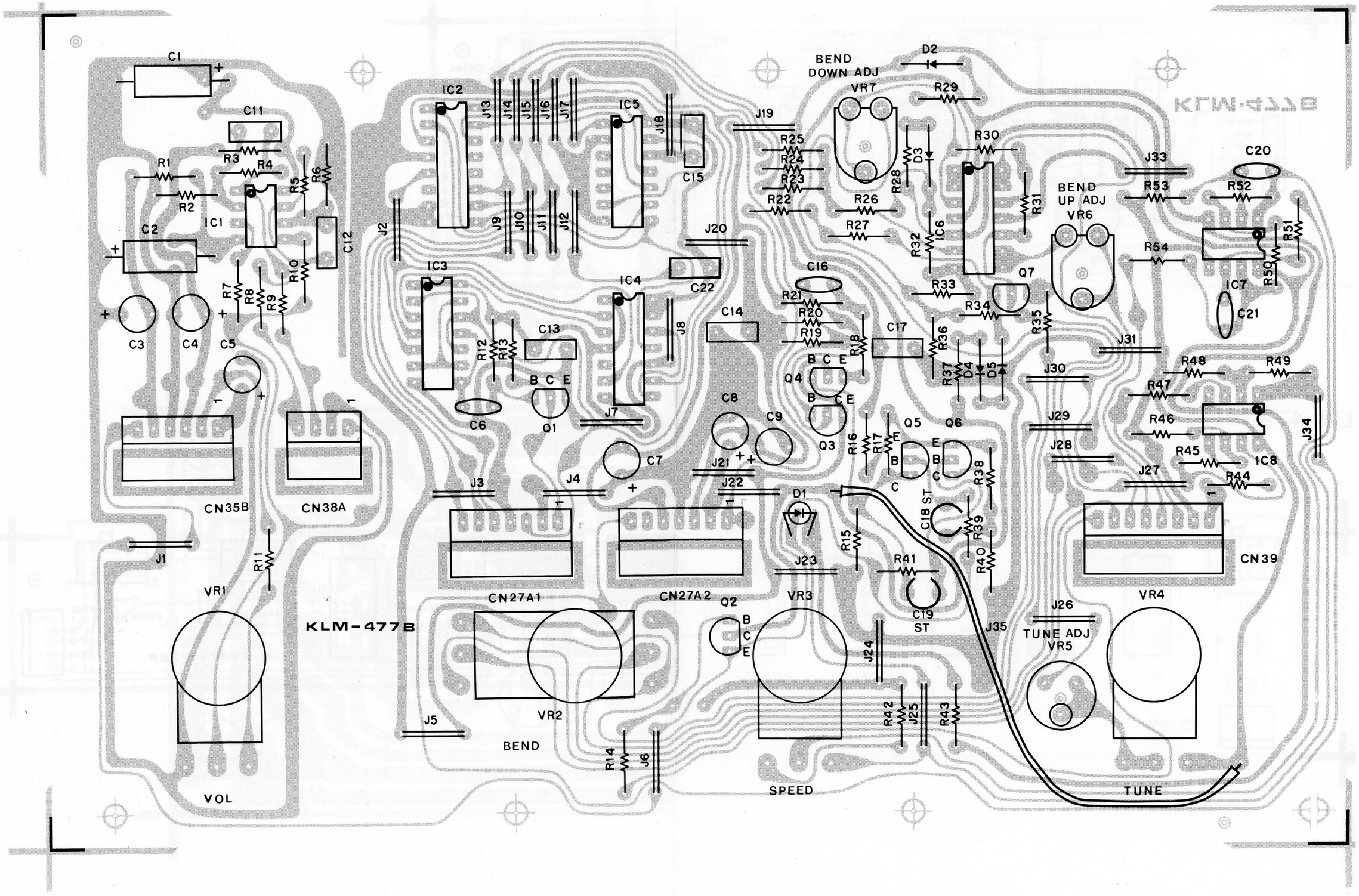
KLM-477B
BEND DOWN ADJ
VR7
BEND UP ADJ
VR6
TUNE ADJ
VR5
CN35B
CN38A
CN27A1
CN27A2
CN39
VR1
VR2
VR3
VR4
VOL
BEND
SPEED
TUNE
IC1
IC2
IC3
IC4
IC5
IC6
IC7
IC8
Q1
Q2
Q3
Q4
Q5
Q6
Q7
D1
D2
D3
D4
D5
C18 ST
C19 ST
J1
J2
J3
J4
J5
J6
J7
J8
J9
J10
J11
J12
J13
J14
J15
J16
J17
J18
J19
J20
J21
J22
J23
J24
J25
J26
J27
J28
J29
J30
J31
J33
J34
J35
R1
R2
R3
R4
R5
R6
R7
R8
R9
R10
R11
R12
R13
R14
R15
R16
R17
R18
R19
R20
R21
R22
R23
R24
R25
R26
R27
R28
R29
R30
R31
R32
R33
R34
R35
R36
R37
R38
R39
R40
R41
R42
R43
R44
R45
R46
R47
R48
R49
R50
R51
R52
R53
R54
C1
C2
C3
C4
C5
C6
C7
C8
C9
C11
C12
C13
C14
C15
C16
C17
C20
C21
C22

KLM-478

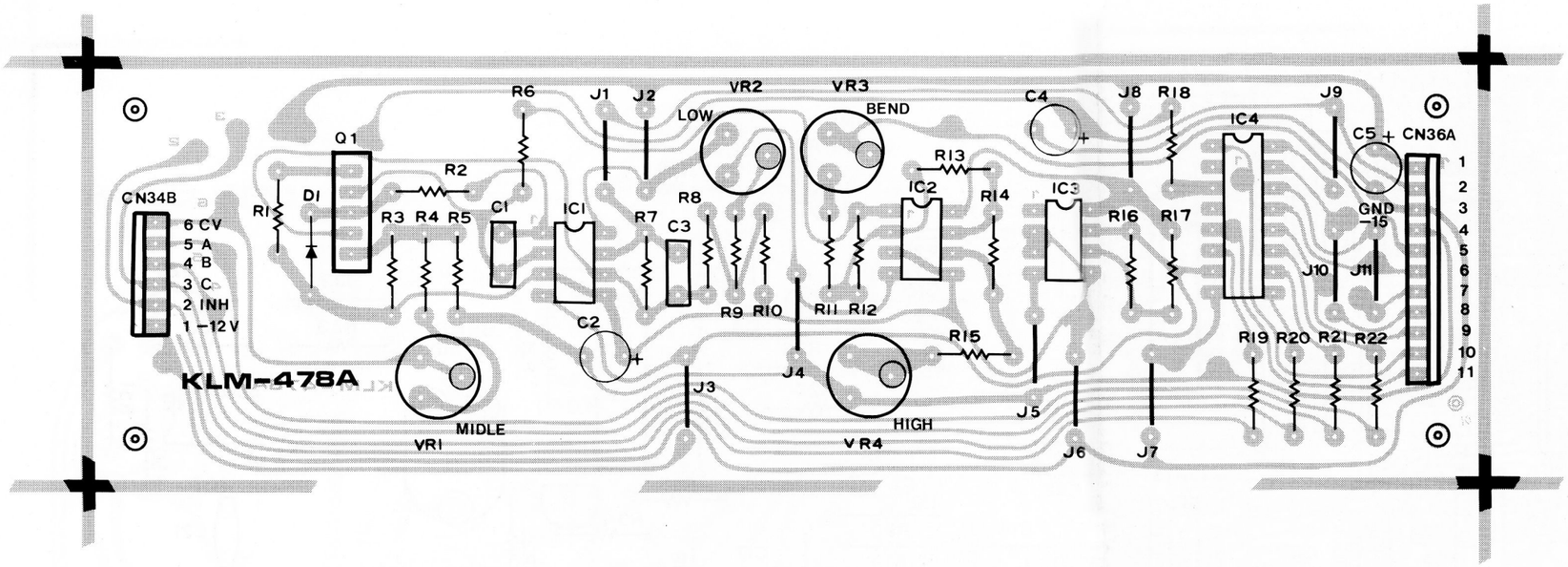

KLM-479

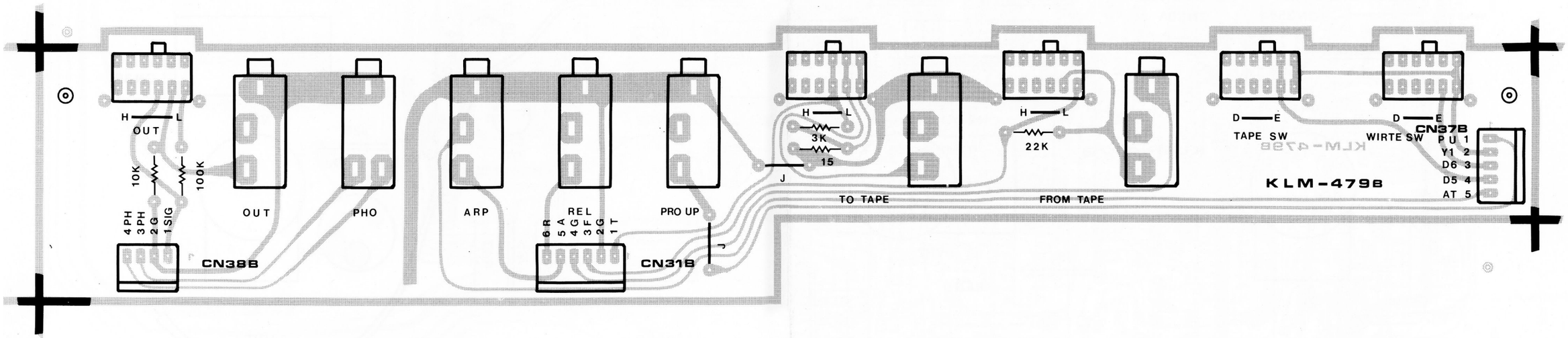

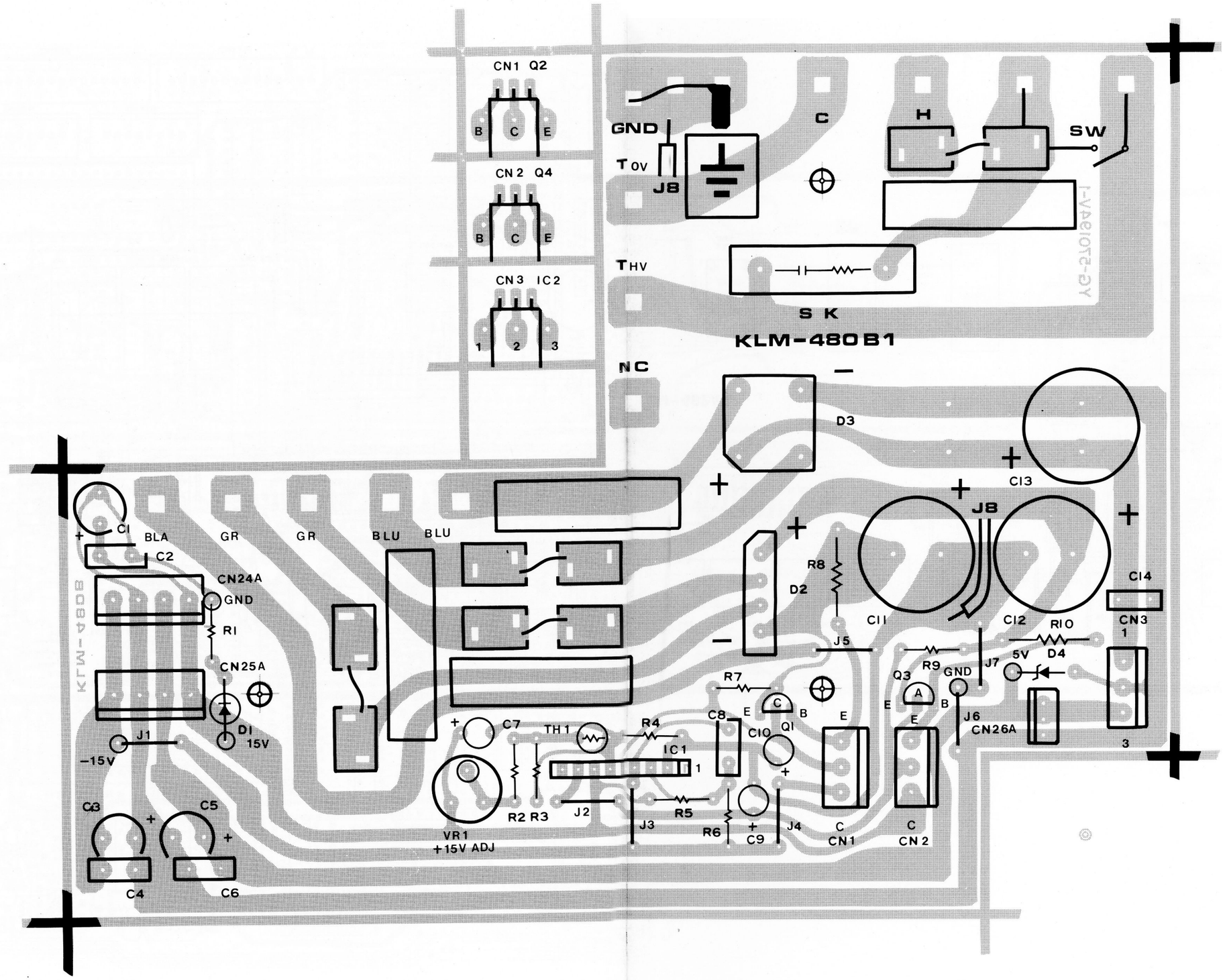
CN1 Q2
B C E
CN2 Q4
B C E
CN3 IC2
1 2 3
GND
TOV
J8
C
H
SW
THV
SK
KLM-480B1
NC
D3
CI3
J8
CI4
CN3
1
3
CI
BLA
C2
GR
GR
BLU
BLU
CN24A
GND
RI
CN25A
DI
15V
J1
-15V
KLM-480B
R8
D2
CI1
J5
CI2
RIO
D4
5V
R9
GND
J7
Q3
A
J6
CN26A
R7
C8
CIO
QI
C7
TH1
R4
IC1
1
J2
R2 R3
J3
R5
R6
C9
J4
VR1
+15V ADJ
C3
C5
C4
C6
C
CN1
C
CN2

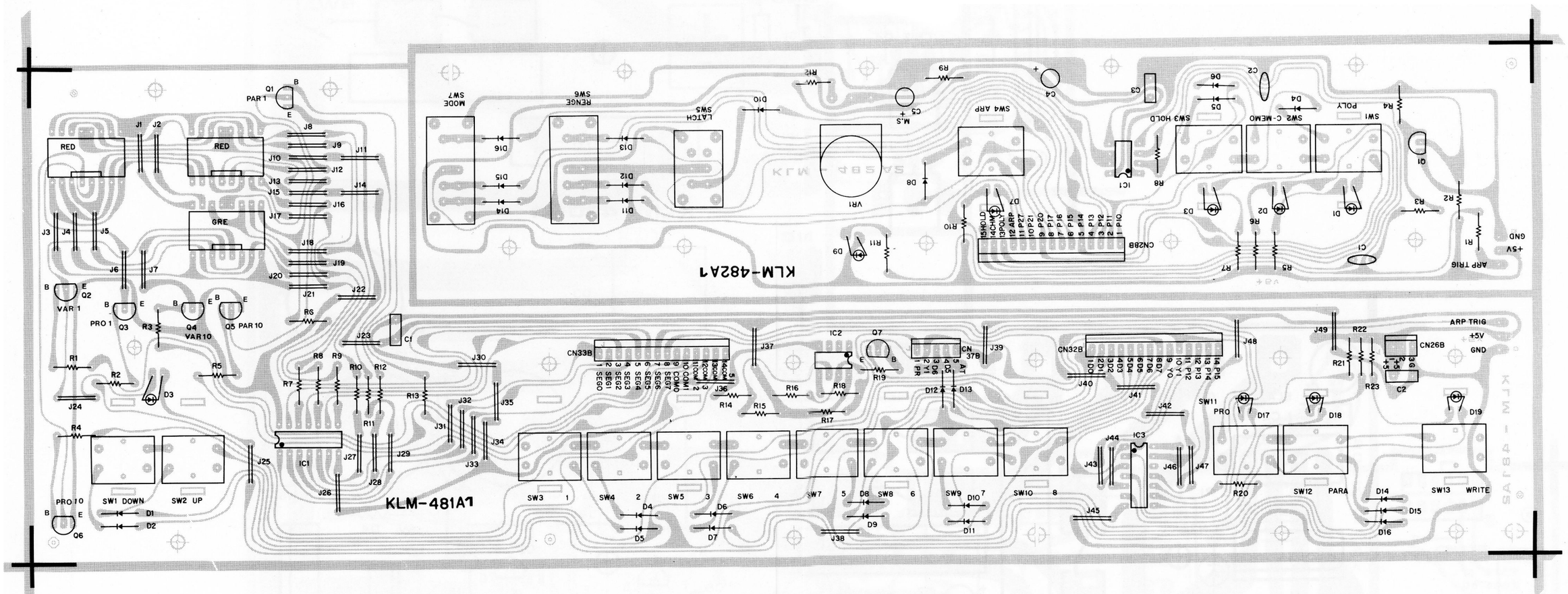
KLM-482A1
KLM-481A1
RED
GRE
PAR 1
VAR 1
PRO 1
VAR 10
PAR 10
SW1 DOWN
SW2 UP
PRO 10
SW3 1
SW4 2
SW5 3
SW6 4
SW7 5
SW8 6
SW9 7
SW10 8
SW11 PRO
SW12 PARA
SW13 WRITE
SW1
SW2 C-MEMO
SW3 HOLD
SW4 ARP
MODE SW7
RENGE SW6
LATCH SW5
CN28B
CN32B
CN33B
CN37B
CN26B
ARP TRIG
+5V
GND
IC1
IC2
IC3
VR1
C1
C2
C3
C4
C5
M.S

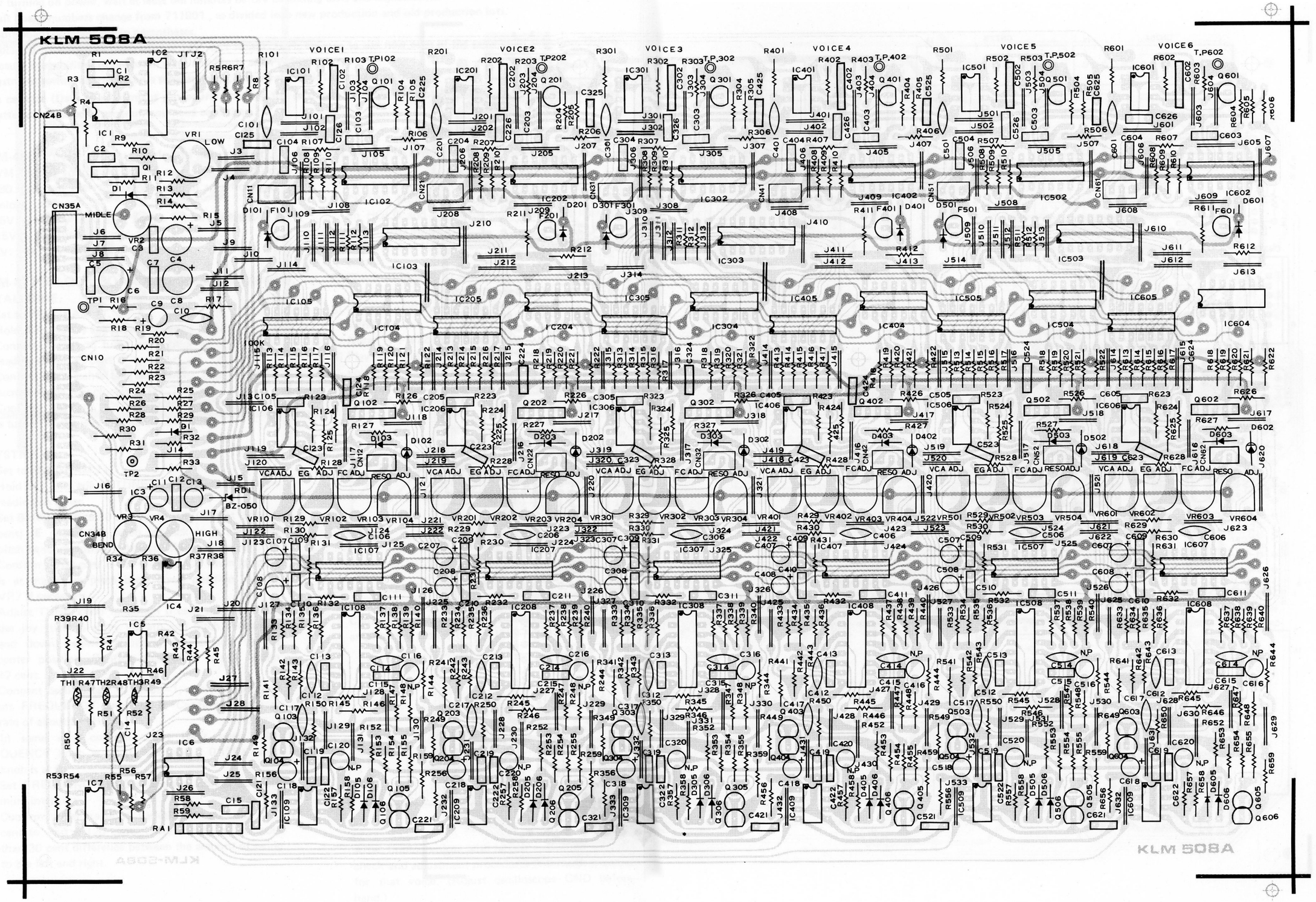
KLM 508A
VOICE1
VOICE2
VOICE3
VOICE4
VOICE5
VOICE6
VCA ADJ
EG ADJ
FC ADJ
RESO ADJ
BZ-050
KLM 508A

KLM-509

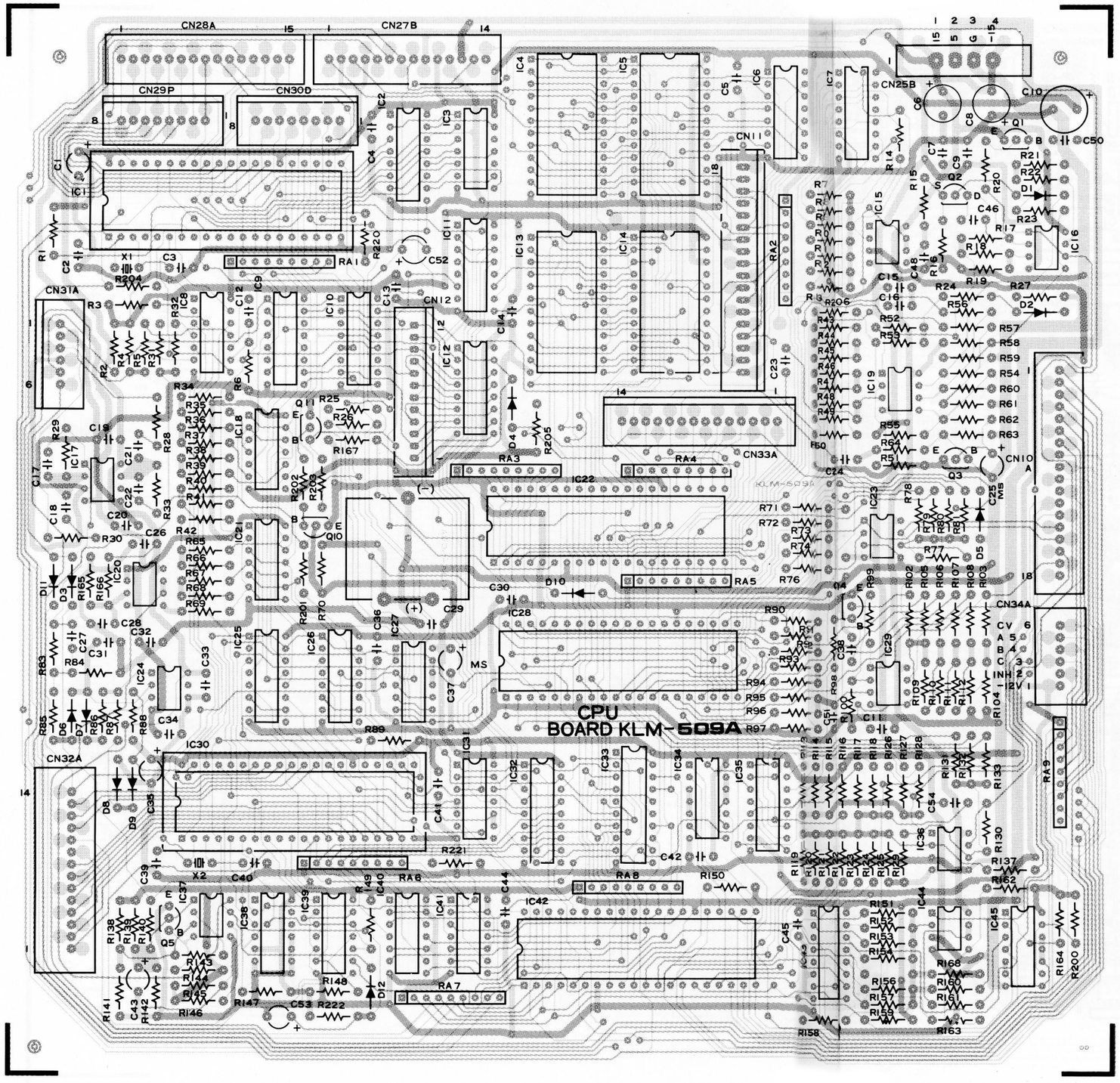
CN28A
CN27B
CN29P
CN30D
CN31A
CN32A
CN33A
CN34A
CN25B
CN10
CN11
CN12
IC1
IC2
IC3
IC4
IC5
IC6
IC7
IC8
IC9
IC10
IC11
IC12
IC13
IC14
IC15
IC16
IC17
IC18
IC19
IC20
IC21
IC22
IC23
IC24
IC25
IC26
IC27
IC28
IC29
IC30
IC31
IC32
IC33
IC34
IC35
IC36
IC37
IC38
IC39
IC40
IC41
IC42
IC43
IC44
IC45
RA1
RA2
RA3
RA4
RA5
RA6
RA7
RA8
RA9
Q1
Q2
Q3
Q4
Q5
Q10
Q11
D1
D2
D3
D4
D5
D6
D7
D8
D9
D10
D11
D12
X1
X2
CPU
BOARD KLM-509A

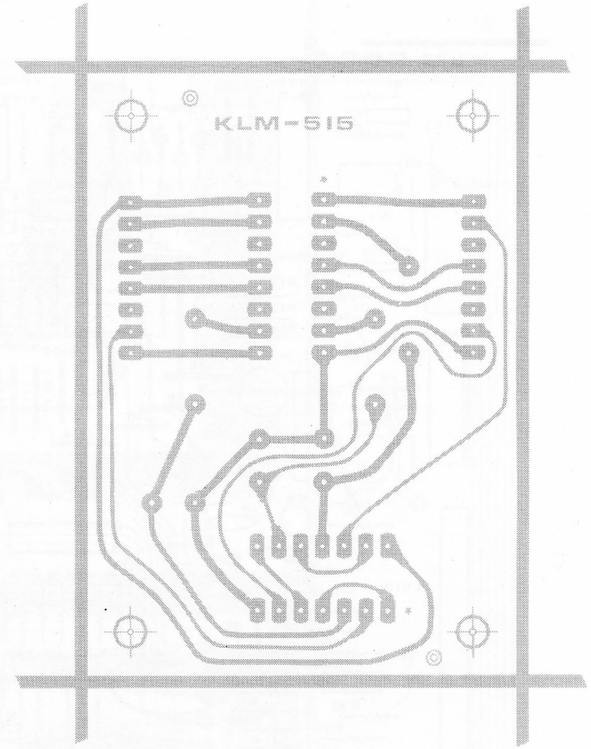
KLM-515

5. REFERENCE DATA

IC 8255A-5 PROGRAMMABLE PERIPHERAL INTERFACE

PIN NAMES

D_7-D_0	DATA BUS (BI DIRECTIONAL)
RESET	RESET INPUT
CS	CHIP SELECT
RD	READ INPUT
WR	RITE INPUT
A0, A1	PORT ADDRESS
PA7-PA0	PORT A (BIT)
PB7-PB0	PORT B (BIT)
PC7-PC0	PORT C (BIT)
Vcc	+5 VOLTS
GND	0 VOLTS

PIN CONFIGURATION

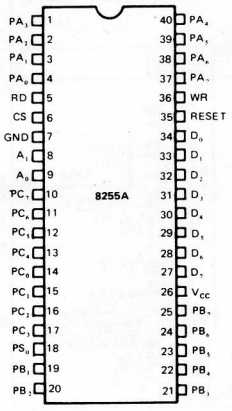

8255A BLOCK DIAGRAM

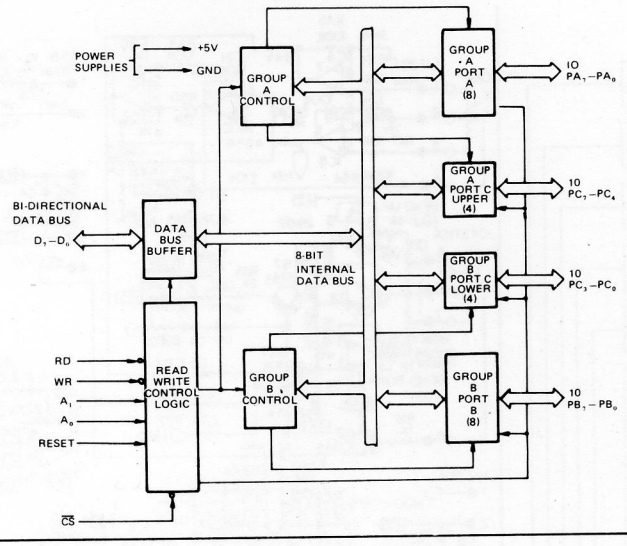

IC8253C-5 PROGRAMMABLE INTERVAL TIMER

PIN NAMES

D_7D_0	DATA BUS (8 BIT)
CLK N	COUNTER CLOCK INPUTS
GATE N	COUNTER GATE INPUTS
OUT N	COUNTER OUTPUTS
RD	READ COUNTER
WR	WRITE COMMAND OR DATA
CS	CHIP SELECT
A_0A_1	COUNTER SELECT
Vcc	+5 VOLTS
GND	GROUND

PIN CONFIGURATION

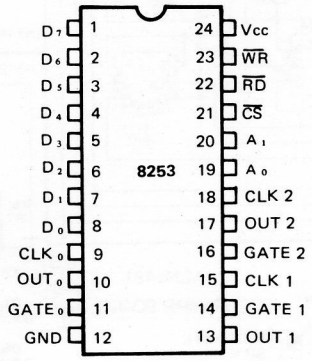

BLOCK DIAGRAM

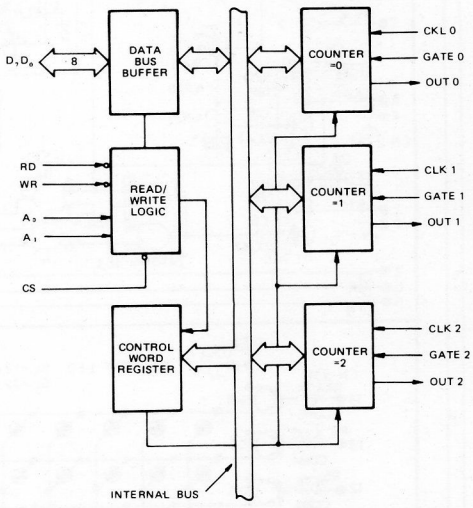

IC8049 SINGLE COMPONENT 8-BIT MICROCOMPUTER

PIN CONFIGURATION

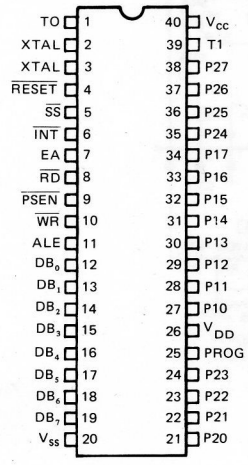

LOGIC SYMBOL

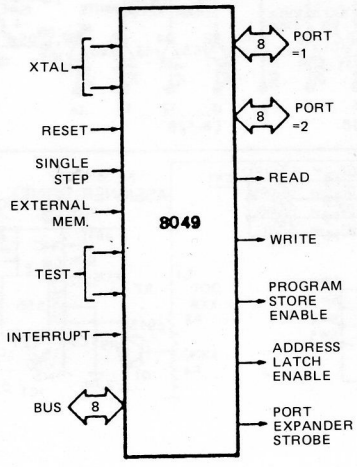

BLOCK DIAGRAM

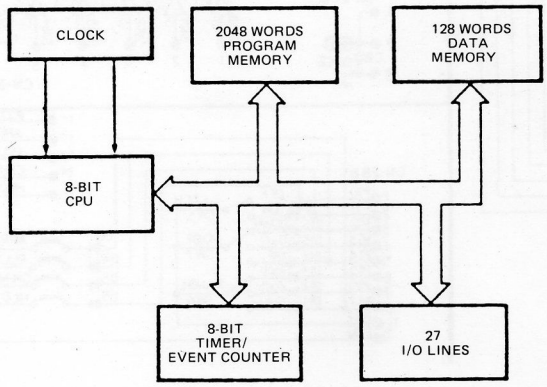

PIN DESCRIPTION

Designation	Pin #	Function
V_{SS}	20	Circuit GND potential
V_{DD}	26	+5V during operation. Low power standby pin.
V_{CC}	40	Main power supply: +5V during operation.
PROG	25	Output strobe for 8243 1/O expander.
P10-P17 Port 1	27-34	8-bit quasi-bidirectional port.
P20-P27 Port 2	21-24	8-bit quasi-bidirectional port.
	35-38	P20-P23 contain the four high order program counter bits during an external program memory fetch and serve as a 4-bit I/O expander bus for 8243
D0-D7 BUS	12-19	True bidirectional port which can be written or read synchronously using the RD, WR strobes. The Port can also be statically latched.
		Contains the 8 low order program counter bits during an external program memory fetch, and receives the addressed instruction under the control of PSEN. Also contains the address and data during an external RAM data store instruction, under control of ALE, RD, and WR.
T0	1	Input pin testable using the conditional transfer instructions JT0 and JNT0. T0 can be designated as a clock output using ENT0 CLK instruction.
T1	39	Input pin testable using the JT1, and JNT1 instructions. Can be designated the timer/counter input using the STRT CNT instruction.
$\overline{INT}$	6	Interrupt input. Initiates an interrupt if interrupt is enabled. Interrupt is disabled after a reset. Also testable with conditional jump instruction. (Active low)

Designation	Pin #	Function
$\overline{RD}$	8	Output strobe activated during a BUS read. Can be used to enable data onto the BUS from an external device.
		Used as a Read Strobe to External Data Memory. (Active low)
$\overline{RESET}$	4	Input which is used to initialize the processor. Also used during verification, and power down. (Active low) (Non TTL V_{IH})
$\overline{WR}$	10	Output strobe during a BUS write. (Active low)
		Used as write strobe to External Data Memory.
ALE	11	Address Latch Enable. This signal occurs once during each cycle and is useful as a clock output.
		The negative edge of ALE strobes address into external data and program memory.
$\overline{PSEN}$	9	Program Store Enable. This output occurs only during a fetch to external program memory. (Active low)
$\overline{SS}$	5	Single step input can be used in conjunction with ALE to "single step" the processor through each instruction. (Active low)
EA	7	External Access input which forces all program memory fetches to reference external memory. Useful for emulation and debug, and essential for testing and program verification. (Active high)
XTAL1	2	One side of crystal input for internal oscillator. Also input for external source. (Not TTL Compatible)
XTAL2	3	Other side of crystal input.

IC M58981P-45 4096-BIT (1024-WORD BY 4-BIT) CMOS STATIC RAM

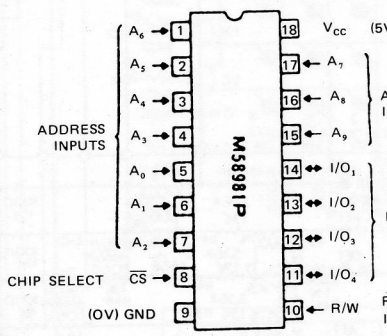

PIN CONFIGURATION

BLOCK DIAGRAM

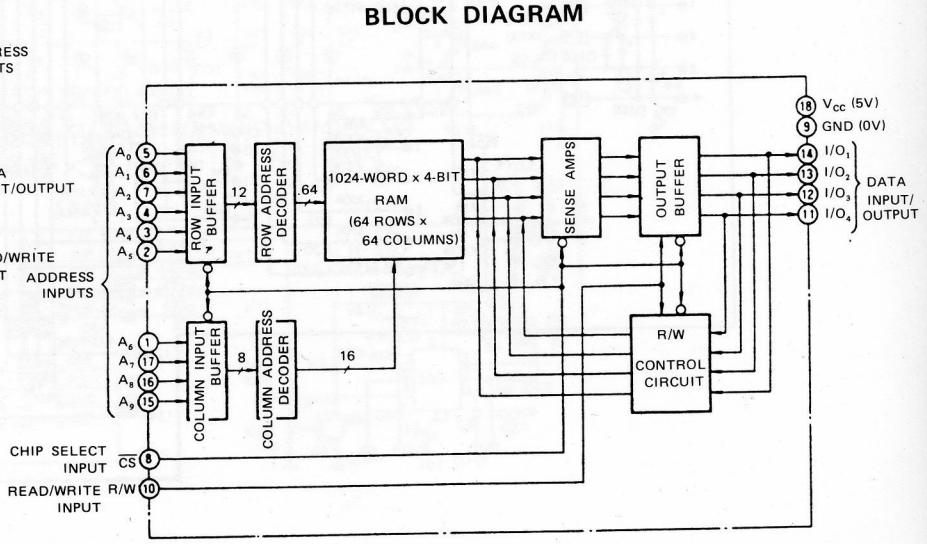

8. CHECK AND ADJUSTMENT PROCEDURE

Caution: Everything has been completely adjusted at the factory prior to shipment. Therefore, never turn any VRs other than those required for servicing.

* **After turning on power, wait at least ten minutes before beginning tests and adjustments.**
* **Circuit board numbers change from 711801 , as divided into new production and old production lots.**

Old circuit board numbers are in parentheses.

* **If replacing KLM-508 (KLM-476) ICs 101~601 NJM072DH, be sure to use new ones of the same color selection. Others will cause irregularities in sawtooth wave amplitude and PW/PWM duty.**
* **Adjustment setting charts are on a separate page. Please refer to it for correct settings.**
* **Data cassette (Data of adjustment procedure) showing the setting is available for repairing and adjusting. Please load the cassette on and select a program you need each time.**

1. KLM-480 (Power supply check and adjustment).

Use DVM (digital voltmeter) to test each check point on KLM-480. Confirm that voltages are within specifications listed below.

(1) +15V: +14.95V~+15.05V; Adjust VR1 if necessary.
(2) −15V: −14.70V~−15.30V
(3) +5V: +4.75V~+5.25V

2. KLM-477 (CLOCK BOARD check and adjustment).

1. TOTAL TUNE.

1) Set to PROGRAM 11.
2) Hold A3 (440Hz) and set TUNE knob to center.
3) Connect output to tuner and adjust VR5 to obtain reading within ±5 cent.
4) Confirm +100 cent (±20 cent) when TUNE knob is turned all the way clockwise (#).
5) Confirm −90 cent (±20 cent) when the TUNE knob is turned all the way counterclockwise (b).

2. JOYSTICK.

1) Set to PROGRAM 11.
2) Hold A3 and adjust TUNE knob to obtain 0 cent reading on tuner.
3) Set BEND knob to 10 and confirm +700 cent (0~+15 cent) (E above A3) when joystick is at maximum pitch bend up position. Adjust VR6 if necessary.
4) Confirm −700 cent (−15~0 cent) (D) when joystick is at maximum pitch bend down position. Adjust VR7 if necessary.
5) Adjust TUNE knob to obtain 0 cent reading. Then use joy stick to apply vibrato and pitch bends (up and down), slowly returning the joystick to the center position. Confirm that pitch is still within ±2 cent.
6) Connect oscilloscope to CN39−1, apply vibrato and set FREQUENCY knob to 5. Confirm vibrato at rate of about 5~6Hz.
7) In same way, confirm about 10Hz when FREQUENCY knob is at 10, and about 0.12Hz when knob is at 0.
8) Set FREQUENCY to 0 and apply vibrato at maximum intensity.
   Confirm tuner readout variation from +60~+120 cent to −60~−120 cent. There should be no more than 30 cent difference between the amount of swing to the left and right.

3. KLM-508 (KLM-478) (ANTI BOARD).

1. ANTI-LOG.

1) Set to PROGRAM 12 and put same note into CHORD MEMORY six times. In other words, turn on HOLD and play same note six times, then turn on CHORD MEMORY.
   Confirm that NJM-072 (IC101~601) are all the same color.
2) Check KLM-508 (KLM-476) (SYNTHE-BOARD) TP1 with DVM and confirm 9.80V~10.20V.
3) Connect oscilloscope GND to TP1 and check TP102~TP602.
   Note: TP1 is not at ground (0V).
4) Play C1 and confirm Fig-1 waveform for all six voices.

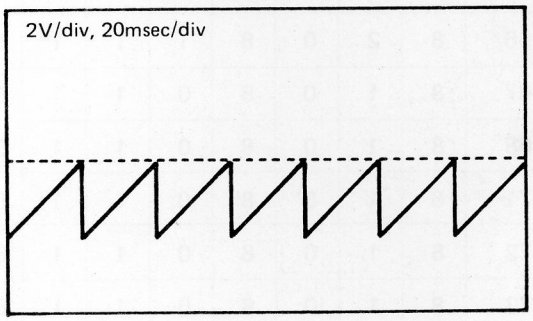

Fig-1

5) Next, expand oscilloscope range and check six voices, finding the one with the greatest amplitude Fig-2 . Confirm that difference between largest and smallest amplitude is within 1.0V.

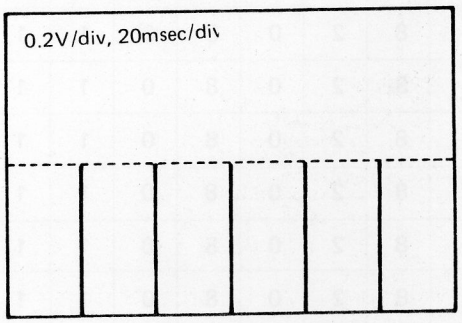

Fig-2

After finding voices with largest amplitude, perform check and adjustment procedures A through I, below, for that voice. (Adjust oscilloscope GND beforehand.)

(A) Play C6 and adjust VR4 so that peak value matches GND.
(B) Play A3 and adjust VR2 (VR1 (MID)) in same way.
(C) Play C1 and adjust VR1 (VR2 (LOW)) in same way.
(D) Repeat steps A~C above, as many times as necessary so that deviation from GND is 0.1V or less.
(E) Set BEND knob to 10, play A3, and bend pitch up and down using joystick. Adjust VR3 (BEND) and VR4 (HIGH) to eliminate amplitude fluctuation during pitch bends. Confirm fluctuation of 0.1V or less.
(F) Repeat steps A~E to bring all values within specifications.
(G) Play C6 and raise OCT (PARAMETER 11) from 8' to 4'. Confirm peak value fluctuation of within 0~−0.2V at 8' and 0~−0.4V at 4'.
(H) At OCT 8' and 16', play each key in the lowest octave of the keyboard and confirm that peak value fluctuations are within +0.2V~−0.4V. Also confirm that LEDs on KLM-508 (KLM-476) for voices 1 through 6 light up in correct order.
(I) Play C6 at 4' OCT and C1 at 16', Use joystick for up and down pitch bends and confirm peak value fluctuation within ±0.3V.

6) After completion, set to PROGRAM 12 again or return parameter 11 (OCTAVE) to 16'.

KLM-508 (KLM-476) (Old circuit board numbers are in parentheses.)

1. Amplitude limitation and 8253 RESET check.

1) Turn on ARPEGGIO switch; set FREQUENCY to 10, turn on LATCH, set RANGE to 10CT, and set MODE to UP.
2) Play any three keys in the lowest octave and any three in the highest octave; arpeggiate them.
3) Observe voice 1 at TP102 with oscilloscope, comfirm sawtooth waveform maximum amplitude is about 12V, and that the waveform appears as in Fig-1.
4) Next, play C, and C6 arpeggiated.

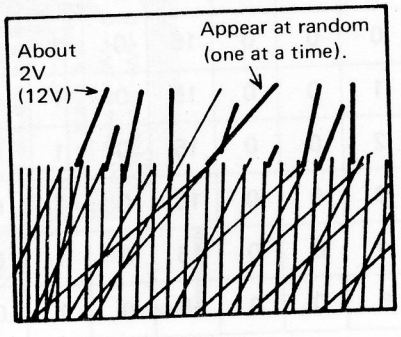

Fig-1

5) Confirm that it is not as shown in Fig-2 , or Fig-3 .

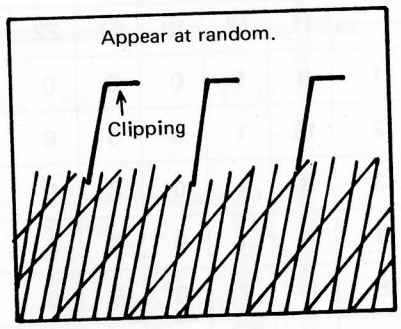

Fig-2

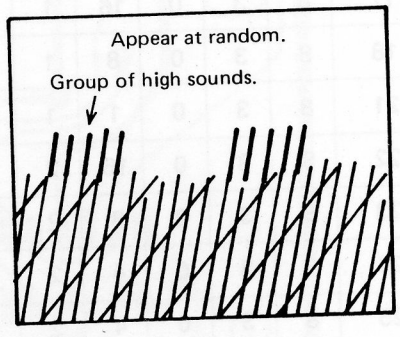

Fig-3

6) Check and confirm in same way for voices 2~6.
7) Turn off CHORD MEMORY and switch to POLY mode. (Turn off ARPEGGIO switch.)

2. DC01 check.

1) OCTAVE.

(1) Connect oscilloscope (1V/div, 2msec/div) to IC6 1-pin (IC3 1PIN) and observe SIGNAL OUT waveform. Confirm amplitude of about 1V.

NOTE: Unless specified otherwise, SIGNAL OUT tests should be performed at this same point in the following instructions as well.

(2) Play C3 and confirm 6 voices.
(3) Switch PROGRAM number from 12 to 13 to 14 (easiest if using footswitch) and confirm OCTAVE change from 16' to 8' to 4'. Also confirm no irregularities in sawtooth waveforms.

2) WAVEFORM

(1) Observe as above; Confirm 6 voices for C3 Key.
(2) Set to PROGRAM 15 and confirm change in waveform from sawtooth to rectangle wave. Confirm no irregularity in waveform.
(3) Confirm that rectangle waveform amplitude is within ±15% of sawtooth waveform amplitude.
(4) Select PARAMETER 12 and switch VALUE between 1 (⟍) and 2 (⊓) while playing C6; confirm no more than 1.5V DC fluctuation. Switch slowly and confirm for all six voices.

3) PW/PWM.

(1) Observe with oscilloscope as in "1" above; confirm six voices for C3.

(2) Adjust oscilloscope TIME/DIV and confirm rectangle wave duty ratio of 50~45%. (See Fig-4.)

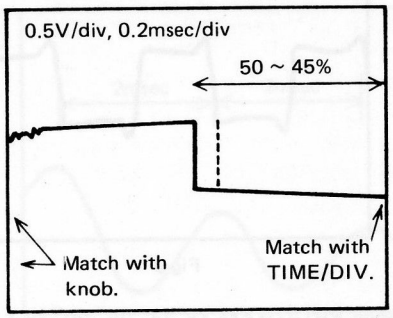

Fig-4

(3) Change PARAMETER 13 (PW/PWM) VALUE one step at a time from 1 to 7 and confirm that pulse width becomes gradually narrower.
Confirm that variation between voices is within 2%.

(4) Confirm that at VALUE 7, PW/PWM duty ratio is 3%~10%.
Confirm deviation between voices is within 2%.
NOTE: When duty ratio changes, DC level also gradually changes and amplitude gradually increases, reaching about 1.2~1.5 times the original at VALUE 7.
There is a time constant of several seconds before amplitude settles down.

(5) Set to PROGRAM 16; raise PW/PWM from 1 to 7 and confirm gradual increase in PWM depth. At 7, PW maximum should be 45~50% and minimum should be 3~10%; confirm that it does not exceed 50% or disappear altogether. MG FREQUENCY may be raised to 2~3.

3. DCO2 check.

1) OCTAVE.

(1) Connect PW/PWM CV terminal TP2 (R6 100kΩ connection point to D1) +5V (CN24-2) and confirm that DCO1 waveform no longer appears.

(2) At above setting, connect oscilloscope to IC6 1-pin (IC3 1PIN) and observe DCO2 waveform.

(3) Confirm change in OCTAVE from 16' to 8' to 4' when PROGRAM is changed from 17 to 18 to 21. At the same time, confirm stepped waveform without abnormalities at each setting. Number of steps corresponds with number of feet. Amplitude is about 1Vp-p.
See Fig-5. Note: Old production units have slightly different waveforms, as shown in Fig-5 (OLD).

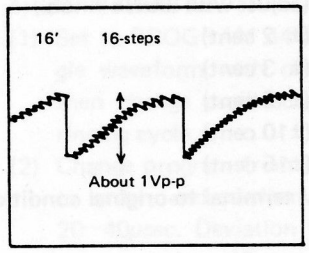

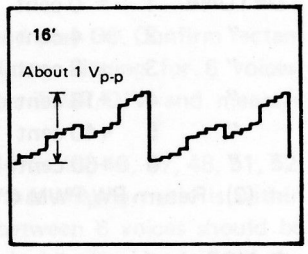

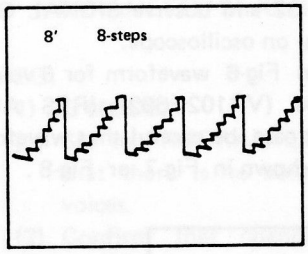

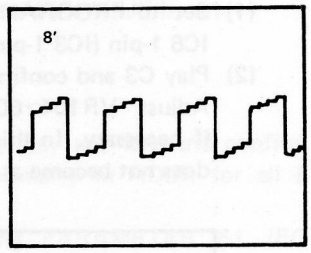

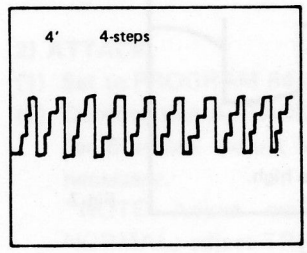

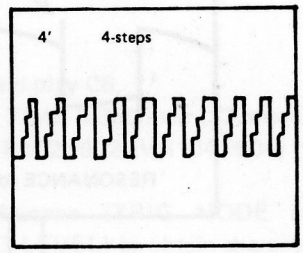

Fig-5 (OLD)

Fig-5 (NEW)

(4) At PROGRAM 21, switch PARAMETER 22 (DCO WAVEFORM) from 0 (OFF) to 1 (⊓) and confirm DC fluctuation is no more than 1.0V.

2) WAVEFORM.

Change PROGRAM from 22 to 23 to 24 and confirm change from 16' to 8' to 4' waveforms with no abnormalities (for 6 voices). Amplitude is about 1Vp-p.

3) INTERVAL.

Change PROGRAM from 24 to 25 to 26 to 27 to 28 (INTERVAL 1 → 5) and confirm change to minor 3d, perfect 3d, perfect 4th, and perfect fifth, respectively (in relation to root note (for 6 voices).

4) DETUNE.

(1) Set to PROGRAM 31, play A3 and check output with tuner.

(2) Change PARAMETER 24 (DETUNE) from 1 through 6 and confirm pitch changes listed below. (Only necessary for 1 voice.)

DETUNE 1 ± 0 cent (adjust with TUNE knob.)
" 2 + 4 cent (± 2 cent)
" 3 + 8 cent (± 3 cent)
" 4 +18 cent (± 5 cent)
" 5 +40 cent (±10 cent)
" 6 +60 cent (±15 cent)

(3) Return PW/PWM CV terminal to original condition.

4. VCF check and adjustment.

1) RESONANCE.

(1) Set to PROGRAM 32 and observe SIGNAL OUT IC6 1-pin (IC3 1-pin) on oscilloscope.

(2) Play C3 and confirm Fig-6 waveform for 6 voices. Adjust VR104~604 (VR102~602) (RES ADJ) if necessary. In this case, be careful that waveform does not become as shown in Fig-7 or Fig-8 .

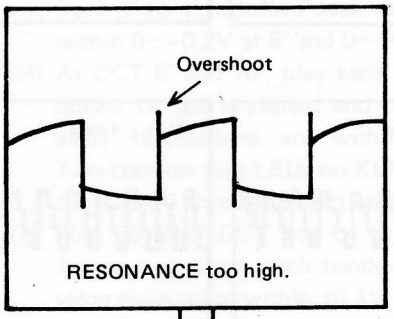

Fig-7

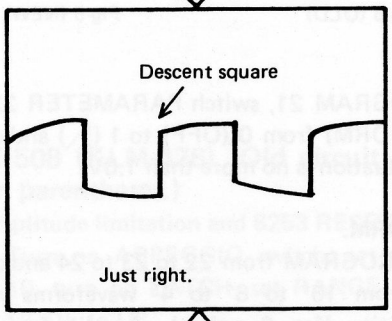

Fig-6

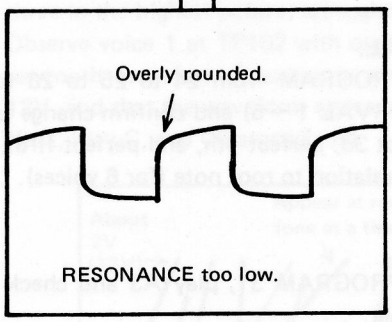

Fig-8

(3) Set PROGRAM to 33 and confirm Fig-9 waveform.

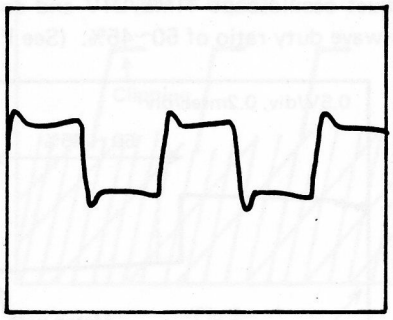

Fig-9

(4) Change PROGRAM to 34, 35, 36, and 37; confirm gradual increase in ringing, reaching instability at 37.

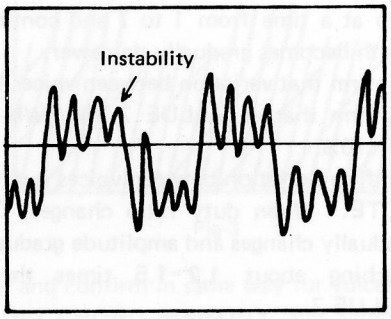

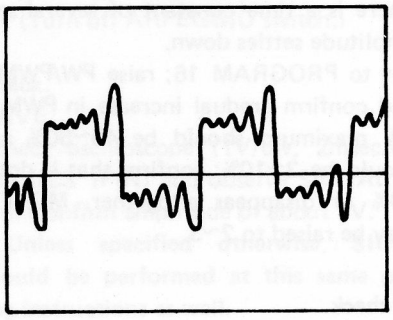

2) CUTOFF FREQUENCY check and adjustment.

(1) Set to PROGRAM 38; play C1 and confirm Fig-10 waveform.

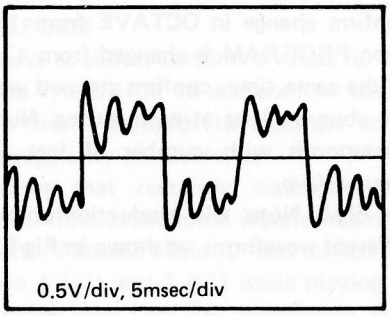

Fig-10

(2) Increase oscilloscope range and observe enlarged ringing section. Adjust VR103~603 (VR101~601 (fc ADJ)) to obtain cycle of 2.0msec, as shown in FIG-11.

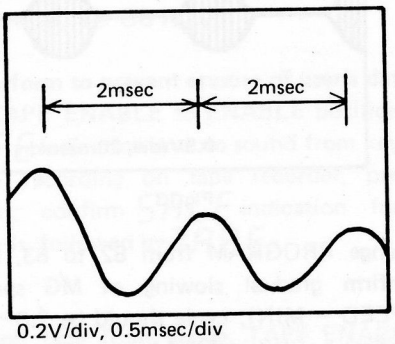

0.2V/div, 0.5msec/div

Fig-11

(3) Set to PROGRAM 41; play C6 and confirm Fig-12 waveform.

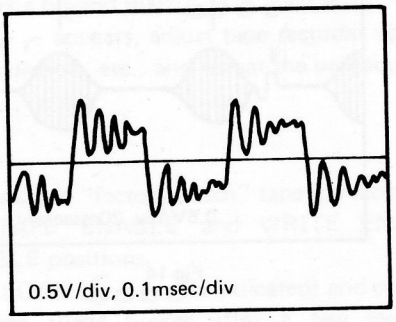

Fig-12

(4) Change oscilloscope range to enlarge ringing and confirm ringing cycle of 20~40μsec. Variation between 6 voices should be within 10μsec.

(5) Set to PROGRAM 42, play C1, and gradually reduce PARAMETER 31 (CUTOFF). Confirm that the waveform's ringing cycle gradually becomes longer and that it virtually becomes a sine wave at about CUTOFF=14. Also confirm that maximum level is reached at a CUTOFF VALUE of 10~18 and that it is 6Vp-p or less. (Deviation between 6 voices should be within three CUTOFF VALUE steps and no more than 1V.)

3) KBD TRACK.

(1) Set to PROGRAM 43 and play C1, C3 and C6. Confirm that amount of ringing for any key (not just C1, C3, C6) is 2.5~4 (average of 3) for all 6 voices. (C6 is a bit less and C1 is a bit more.)

(2) Find key that produces least change in fc (change in ringing cycle) when PARAMETER 33 (KBD TRACK) is switched between 1 (ON) and 2 (OFF). Confirm that key is between B2 and F3 for all 6 voices.

4) EG INTENSITY.

(1) Set to PROGRAM 44 and play C6. Confirm rectangle waveform with ordinary ringing for 6 voices, then change oscilloscope TIME/DIV and measure ringing cycle.

(2) Change program from 44 to 45, 46, 47, 48, 51, 52, in order, and confirm that ringing cycle is within 20~40μsec. Deviation between 6 voices should be no more than 15μsec. It is still acceptable if the above specifications can be achieved by changing PARAMETER 31 (CUTOFF) VALUE by ±1.

5. EG.

1) EG MODE.

(1) Set to PROGRAM 53, play any key and confirm that there is no abnormality in ADSR for all 6 voices.

(2) Confirm that changing PARAMETER 51 (EG MODE) from 1 to 0 gives an organ tone for all 6 voices.

2) ATTACK.

(1) Set to PROGRAM 54 and play C6.

(2) Confirm that ATTACK TIME is 350msec (±20msec) for 6 voices. Adjust VR102~602 (VR104~604) if necessary.
*NOTE: Adjust oscilloscope (TRIG MODE at NORMAL; adjust TRIG LEVEL) to obtain sharpest envelope attack.

(3) Set to PROGRAM 55. Confirm ATTACK TIME (maximum value) of 8~12sec and deviation between voices of within 2sec.

3) DECAY.

Set to PROGRAM 56. Confirm DECAY TIME of 15~30sec and within 7sec deviation between 6 voices.
*NOTE: Here DECAY TIME is the time from when you play a single key to when you can no longer hear the sound from the amp. At the same time confirm that sustain level does not remain.

4) SUSTAIN.

Change PROGRAM from 57 to 58, 61, 62 and confirm that SUSTAIN LEVEL gradually rises for all 6 voices.
*NOTE: At PROGRAM 57 (SUSTAIN = 1), the sound is barely audible when amp volume is turned up, although it may not be heard at all. A short "pop" sound is not abnormal since ATTACK and DECAY are both at 0.

5) RELEASE.

(1) Set to PROGRAM 63 with RELEASE TIME at 15~30sec. Confirm deviation of within 7sec between 6 voices.
*NOTE: Here RELEASE TIME is the time from when you play a single key to when you can no longer hear the sound from the amp. At the same time, confirm that sustain level does not remain.

(2) Set to PROGRAM 64 and connect foot switch (GND) to RELEASE jack.
Confirm that RELEASE TIME is about 100msec when foot switch is OFF and about 5~10sec when foot switch is ON. This may be judged by ear.

6. VCA check and adjustment.

1) GAIN.

(1) Set to PROGRAM 64 and play C3.

(2) Confirm sawtooth waveform output amplitude of 1.0Vp-p (±0.05Vp-p) for all 6 voices.

(3) Adjust VR101~601 (VR103~603) if necessary.

2) MIXING LEVEL.

(1) Eliminate DC01 waveform by connecting PW/PWM terminal (R6 100kΩ connection point to D1) to +5V (CN24-2).

(2) Set to PROGRAM 66 and play C3. Confirm DCO2 stepped waveform amplitude of 1.0Vp-p (±0.15Vp-p) for 6 voices.

(3) After completion, return PW/PWM to normal condition.

6. MG check.

1) DCO MODULATION.

(1) Set to PROGRAM 67, play A3 and turn on HOLD.

(2) Check output with tuner; adjust TUNE knob to obtain ±0 cent reading.

(3) Change PROGRAM from 68 to 71, 72, 73, and confirm gradual increase in vibrato depth.

(4) At PROGRAM 73 (VIBRATO at maximum), confirm swing from +35~+55 cent to −35~−55 cents.

2) VCF MODULATION.

(1) Set to PROGRAM 74, play A3 and turn on HOLD. Observe output on oscilloscope.

(2) Change PROGRAM from 74 to 75, 76, 77, and confirm gradual increase in Fom depth (depth of riging cycle movement).

(3) At PROGRAM 78, move joy stick to −Y and confirm same kind of modulation as above.
Maximum depth should be about the same as PROGRAM 76 (MG VCF = 5). Joy stick SPEED should be at about 2.

3) SPEED.

(1) Set to PROGRAM 81, play A3 and turn on HOLD.

(2) Confirm MG cycle of 60~100msec (Fig-13).

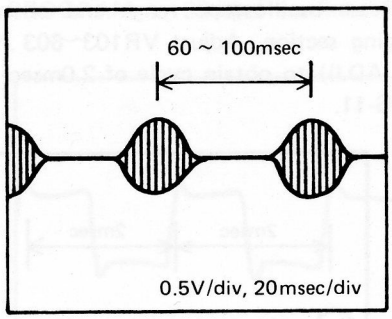

Fig-13

(3) Change PROGRAM from 82 to 83, 84, 85, and confirm gradual slowing of MG speed. At 85 (SPEED = MIN), cycle should be 2.0~3.5sec. Also confirm no "a" in Fig-14 appearing when HOLD is released and A3 played. Check for 6 voices.

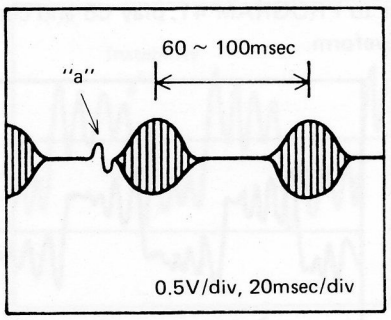

Fig-14

4) DELAY.

(1) Set to PROGRAM 86, play C3, and confirm that DELAY TIME does not affect FcM.

(2) Set to PROGRAM 87 and confirm DELAY TIME within 0.2~0.4sec.

(3) Set to PROGRAM 88 and confirm DELAY TIME within 1.2~2.5sec.

7. TOTAL check.

1) OUTPUT LEVEL.

Confirm that output amplitude can be switched 10 : 1 (±10%).
NOTE: This will vary with amp input impedance so test without load.

2) PHONE.

Confirm that headphone volume can be adjusted from 0 to 10. Also check PHONE OUT with oscilloscope and confirm no oscillation.

3) Backup battery.

Turn off power. Use DVM to check terminals of KLM-509 (KLM-475) battery and confirm 3.60V~4.3V.

8. TAPE INTERFACE

1) SETTING

Connect POLY-61 to cassette recorder in following way.

(1) To tape → Tape recorder LINE IN (or MIC IN)

(2) From tape ← Tape recorder LINE OUT (or EARPHONE OUT)

2) SAVE (Perform to prevent erasure of user's data.)

(1) Set TAPE ENABLE to ENABLE position; confirm TAPE indication and no sound from keyboard.

(2) Begin recording on tape recorder, press SAVE switch; confirm SAVE indication for a few seconds, followed by TAPE.

3) VERIFY.

(1) Rewind tape from above. TAPE ENABLE should be at ENABLE position.

(2) Press VERIFY switch (VRFY is indicated); play tape.

(3) Confirm that after a few seconds the indication flickers a bit and then Good appears.

(4) If Err appears, adjust tape recorder volume and tone controls, etc., and repeat the procedure several times.

4) LOAD.

(1) Put supplied "factory patch" tape in recorder.

(2) Set TAPE ENABLE and WRITE ENABLE to ENABLE positions.

(3) Press LOAD (Good is indicated) and play tape.

(4) Confirm slight flicker after a few seconds and indication.

(5) If Err appears, check tape recorder output level, tone settings, etc., and try again several times.

9. PARTS LIST

PART CODE	PART NAME SPECIFICATIONS	P.C. BOARD	Q'TY
CARBON RESISTORS (NOT LISTED)			
SOLID RESISTORS			
11513822	1/4KYLC22M	KLM-508	6
METAL FILM RESISTOR			
12413100	1/4TP 100Ω	KLM-508	5
12413243	1/4TP 243Ω	KLM-480	1
12413806	1/4TP 806Ω	KLM-508	3
12414100	1/4TP 1.00K	KLM-477	4
		KLM-508	6
12414200	1/4TP 2.00K	KLM-480	1
		KLM-508	1
12414237	1/4TP 2.37K		1
12414274	1/4TP 2.74K	KLM-509	1
12414301	1/4TP 3.01K	KLM-508	1
12414316	1/4TP 3.16K		3
12414402	1/4TP 4.02K		1
12414499	1/4TP 4.99K	KLM-509	1
12414562	1/4TP 5.62K	KLM-477	1
12414750	1/4TP 7.5K	KLM-508	1
12414866	1/4TP 8.66K	KLM-477	2
12414887	1/4TP 8.87K		1
12414931	1/4TP 9.31K		1
12415100	1/4TP 10.0K	KLM-480	2
		KLM-508	15
		KLM-509	4
12415121	1/4TP 12.1K	KLM-508	1
		KLM-509	1
12415127	1/4TP 12.7K	KLM-480	1
12415150	1/4TP 15.0K	KLM-508	13
12415162	1/4TP 16.2K	KLM-509	1
12415255	1/4TP 25.5K	KLM-508	1
12415340	1/4TP 34K	KLM-509	1
12415357	1/4TP 35.7K	KLM-508	6
12415499	1/4TP 49.9K		1
12416100	1/4TP 100K		1
		KLM-509	7
12416150	1/4TP 150K		1
12416200	1/4TP 200K		8
12416255	1/4TP 255K		1
12416267	1/4TP 267K		1
12416301	1/4TP 301K		1
12416332	1/4TP 332K		1
12416475	1/4TP 475K		1
12416499	1/4TP 499K	KLM-508	6
LINEAR RESISTOR			
13233100	LT3600 1/4SJ 100Ω	KLM-508	1
BLOCK RESISTOR			
13506510	RKC1/8B6J 10K	KLM-508	1
13508410	RKC1/8B8J 1K	KLM-509	1
13508510	RKC1/8B8J 10K		8
THERMISTOR			
18032320	TD5-A120DA	KLM-508	3
18032350	TD5 A150DA	KLM-480	1
MYLAR CAPACITORS			
20402410	50V 0.001UFK	KLM-509	1
20402415	50V 0.0015UFK	KLM-508	12
20402422	50V 0.0022UFK		6
20402433	50V 0.0033UFK	KLM-509	1
20402447	50V 0.0047UFK	KLM-477	2
20402510	50V 0.01UFK	KLM-477	1
		KLM-482	1

PART CODE	PART NAME SPECIFICATIONS	P.C. BOARD	Q'TY
20402510	50V 0.01UFK	KLM-509	2
20402547	50V 0.047UFK	KLM-477	1
		KLM-482	1
20402547	50V 0.047UFK	KLM-508	14
		KLM-509	3
20402556	50V 0.056UFK		1
20402568	50V 0.068UFK		1
20402610	50V 0.1UFK	KLM-508	1
STYROL CAPACITOR			
20503247	50V JT 47PF	KLM-477	2
CERAMIC CAPACITORS			
21238610	25V 0.1UF	KLM-508	8
		KLM-480	4
21289510	50V 0.01UF		1
21442100	50V 10PF	KLM-509	2
21442220	50V 22PF	KLM-477	2
		KLM-508	1
		KLM-509	2
21443100	50V 100PF	KLM-508	13
21443220	50V 220PF		12
21443470	50V 470PF		6
		KLM-509	1
21445100	50V 0.01UF		1
21446100	25V 0.1UF	KLM-477	5
		KLM-481	2
		KLM-482	1
		KLM-508	58
		KLM-509	27
SPARK KILLER			
21900300	PME265MC 533	KLM-480	1
ELECTROLYTIC CAPACITOR			
23007310	A16V 100UF	KLM-480	3
23007447	A16V 4700UF		1
23013210	A35V 10UF		2
23013422	A35V 2200UF		2
23015110	A50V 1UF		2
23107310	B16V 100UF	KLM-477	2
23307210	A16V 10UF	KLM-509	1
23315068	A50V 0.68UF		1
23315115	A50V 1.5UF	KLM-482	1
25003210	16V 10UF	KLM-477	6
		KLM-482	1
		KLM-508	7
		KLM-509	5
25003222	16V 22UF	KLM-508	12
25003310	16V 100UF		3
25006110	50V 1UF		2
		KLM-509	2
25006147	50V 4.7UF		1
25062222	10V 22UF	KLM-508	6
25063210	16V 10UF		6
POLYPROPYLENE CAPACITORS			
26000510	100V 0.01UF	KLM-508	6
TRANSISTORS			
30000727	2SA733 AK	KLM-480	1
30001007	2SA798 F/G	KLM-508	7
30100500	2SB-941 Q/R	KLM-480	1
30100618	2SB-644 R/S	KLM-481	6
30200327	2SC945 AK	KLM-480	1
30200394	2SC945AK S (B)	KLM-508	24
30300700	2SD-1266 Q/R	KLM-480	1

PART CODE	PART NAME SPECIFICATIONS	P.C. BOARD	Q'TY
30400010	2SA733A K TN	KLM-477	1
		KLM-481	1
		KLM-509	2
30420010	2SC945A K TN	KLM-477	4
	(or 2SC2785K TN)	KLM-482	1
		KLM-508	6
		KLM-509	4
30420030	2SC2901 K TN	KLM-477	2
	FET		
30460010	2SK30A TM-O TNE-2	KLM-508	6
	2SK381-34-C	KLM-509	1
	BRIDGE DIODE		
31010100	1B4B41	KLM-480	1
31010200	4B4B41		1
	ZENER DIODE		
31101400	RD 7.5EB3		1
31102900	BZ-050	KLM-508	1
	LED		
31200500	GL-9PR-2	KLM-477	1
		KLM-481	1
		KLM-482	1
31201500	LT-8001P	KLM-480	1
31410100	LT-8201P	KLM-508	6
31201900	GL 9PR24	KLM-481	3
		KLM-482	4
31250300	SL-1221 RED	KLM-481	2
31250400	SL-2221 GREEN		1
	DIODE		
31400100	1S1555 TP	KLM-477	4
		KLM-481	15
		KLM-482	11
		KLM-508	26
		KLM-509	11
	IC		
32001042	UPD-8253C-5	KLM-509	4
32001043	UPD-8255AC-5		3
32001049	UPD-8049C-337		1
32001051	UPD8049C-384		1
32004004	HD-14066 BP	KLM-508	12
		KLM-509	1
32004006	HD-14520 BP	KLM-508	3
32004009	HD-14013 BP	KLM-509	1
32004010	HD-14023 BP		2
32004016	HD-14050 BP		1
32004017	HD-14051 BP	KLM-508	1
		KLM-509	3
32004019	HD-14069 UBP		3
32004020	HD-14174 BP		1
32004021	HD-14503 BP		3
32004026	HD-14175 BP		2
32009001	NJM-4558D-V	KLM-477	2
		KLM-508	9
		KLM-509	8
32009002	NJM-4556 D	KLM-477	1
32009006	NJM-4560 D	KLM-508	7
32009007	NJM-2902 N	KLM-477	1
32009009	NJM-072D	KLM-508	1
		KLM-509	1
32009010	NJM-072D-H	KLM-508	6
32009011	NJM-7805A	KLM-480	1
32009014	NJM-2901 N	KLM-508	6

PART CODE	PART NAME SPECIFICATIONS	P.C. BOARD	Q'TY
32009015	NJM-2903 D	KLM-481	1
		KLM-509	1
32009017	NJM-13600D-A	KLM-508	6
32009018	NJM-79L05 A		1
32009019	NJM-555 D	KLM-482	1
32011001	M-5230L-11-B	KLM-480	1
32011003	M-74LS00	KLM-477	1
		KLM-509	1
32011004	M-74LS04		1
32011005	M-74LS08		2
32011006	M-74LS32		1
32011007	M-74LS74	KLM-477	1
32011008	M-74LS139	KLM-509	1
32011009	M-74LS151	KLM-477	1
32011010	M-74LS373	KLM-509	1
32011011	M-74LS393	KLM-477	1
32011012	M-53206	KLM-481	2
32011013	M-58981P-45	KLM-509	1
32012001	MB-3761 M		1
32029006	SSM-2056	KLM-508	6
	CERAMIC OSCILLATOR		
33500900	EFO-A6R0M01	KLM-509	2
	P.C. BOARD		
34047701	KLM-477	KLM-477	1
34047902	KLM-479	KLM-479	1
34048002	KLM-480	KLM-480	1
34048101	KLM-481	KLM-481	1
34048201	KLM-482	KLM-482	1
34050800	KLM-508	KLM-508	1
34050900	KLM-509	KLM-509	1
	SEMI-FIXED RESISTOR		
35121210	B1K	KLM-477	2
35121410	B100K	KLM-508	12
35121510	B1M		12
35201133	H1051A 330ΩB		1
35201210	H1051A 1KB	KLM-477	1
35201247	H1051A 4.7KB	KLM-480	1
35201310	H1051A 10KB	KLM-508	2
35201410	H1051A 100KB		1
	ROTARY VR		
36014100	EVH-5LA814B14	KLM-477	2
36015400	EVH-5LA814B32		1
36015500	EVH-5LA814C16	KLM-482	1
36015600	K16200005 10KB		2
36203700	VR EWJ-6KA359 B13	KLM-477	1
	SLIDE		
37301000	SW SSB-122019	KLM-482	1
37301600	SW SSB-123014		1
37303500	SW SSB-123013		1
37303900	SW R-S47836	KLM-479	5
	POWER SW		
37504600	1801-1211		1
	TACT SW		
37505000	KHC-10901	KLM-481	13
		KLM-482	4
	POWER TRANSFORMER		
40007900	TA-009	100V	1
		UNI	1
		JAM	1
		117 2P	1

PART CODE	PART NAME SPECIFICATIONS	P.C. BOARD	Q'TY
40008000	TB-009	220 GE	1
40008000	TB-009	220 SE	1
		240 AF	1
		240 AU	1
		DEMKO	1
		SEMKO	1
		NEMKO	1
		240 GE	1
		220 FR	1
KEY BOARD			
42002300	ESK-7010		1
PHONE JACK			
45001400	SG-4611 #01	KLM-479	6
45001700	SG-4612 #01		1
FUSE			
46402301	125V 2A UL	100V	1
		UNI	1
		JAM	1
		117 2P	1
46412003	250V 1.0A UL	100V	3
		UNI	3
		JAM	3
		117 2P	3
46462001	250V T1.0A	220 GE	3
		220 SE	3
		240 AF	3
		240 AU	3
		DEMKO	3
		SEMKO	3
		NEMKO	3
		240 GE	3
		220 FR	3
46462301	250V T2.0A	220 GE	1
		220 SE	1
		240 AF	1
		240 AU	1
		DEMKO	1
		SEMKO	1
		NEMKO	1
		240 GE	1
		220 FR	1
HARNESS			
47032400	HNS-224		1
47032500	HNS-225		1
47032600	HNS-226		1
47032700	HNS-227		1
47032800	HNS-228		1
47033100	HNS-231		1
47033200	HNS-232		1
47033300	HNS-233		1
47033500	HNS-235		1
47033700	HNS-237		1
47033800	HNS-238		1
47033900	HNS-239		1
47034200	HNS-242		2
47036500	HNS-265		1
47036600	HNS-266		1
47036700	HNS-267		1
47037900	HNS-279	KLM-508	1
47038000	HNS-280		1
CONNECTOR TOP			
47100301	B3P-SHF-1	KLM-480	1

PART CODE	PART NAME SPECIFICATIONS	P.C. BOARD	Q'TY
47100601	B6P-SHF-1	KLM-508	1
		KLM-509	1
47100801	B8P-SHF-1		2
47101201	B12P-SHF-1		1
47101401	B14P-SHF-1		1
47101801	B18P-SHF-1		1
CONNECTOR			
47140600	HBLB-6S-1J	KLM-508	1
		KLM-509	1
47141800	HBLB-18S-1J	KLM-508	1
		KLM-509	1
47150300	B3P-VH	KLM-480	3
47150400	B4P-VH		2
		KLM-508	1
		KLM-509	1
CONNECTOR SIDE			
47200301	BS3P-SHF-1	KLM-481	1
47200401	BS4P-SHF-1	KLM-479	1
47200501	BS5P-SHF-1		1
		KLM-481	1
47200601	BS6P-SHF-1	KLM-479	1
47201401	BS14P-SHF-1	KLM-481	2
		KLM-509	2
47201501	BS15P-SHF-1	KLM-482	1
		KLM-509	1
CONNECTOR BOTTOM			
47300401	BE4P-SHF-AA	KLM-477	1
47300601	BE6P-SHF-AA		1
47300701	BE7P-SHF-AA		2
47300801	BE8P-SHF-AA		1
IC SOCKET			
48005142	14P C471411	KLM-508	6
48005402	40P C474011	KLM-509	2
FUSE HOLDER			
51501600	S-N5053 #01	KLM-480	8
BATTERY			
52000900	3/170DK (3.6V 170MAH)	KLM-509	1
BUSHING			
54000300	SR-4K-4	100V	1
		UNI	1
		117 2P	1
54000400	SR-5P-4	JAM	1
		240 AU	1
54000500	SR-6W-1	220 GE	1
		220 SE	1
		240 AF	1
		DEMKO	1
		SEMKO	1
		NEMKO	1
		240 GE	1
		220 FR	1
CAP			
54002500	6x20x1.2	KLM-508	1
CORD KEEP			
54005200	K-105G		4
BUSHING			
54005800	TA-310		11
54005804	TA-305 UL94V0		6

PART CODE	PART NAME SPECIFICATIONS	P.C. BOARD	Q'TY
54005900	TB-300		11
54005902	TB-300 UL94V0		6
	TEST PIN		
54007100	LC-2-G YELLOW	KLM-508	8
	FLAT CABLE		
54520040	SMCD-18x90-BDx10		1
54520070	SMCD-6x90-BDx10		1
	SLIDE COVER		
56005400	KOC-F40222		3
	RADIATION BOARD		
56002500	KOC-C30207		1
	LED HOLDER		
57502500	3x6x6.5	KLM-481	3
		KLM-482	4
57502600	3x6x7	KLM-477	1
		KLM-481	1
		KLM-482	1
	AC CORD		
60000101	KE1044 0.75SQ 2.5M	100V	1
60000200	SPT-2 18AWG/2 2.5M G	UNI	1
		117 2P	1
60000300	CLASS1H05VV-F3x0.75	220 GE	1
		DEMKO	1
		SEMKO	1
		NEMKO	1
		240 GE	1
60000400	SAA 3x0.75 2.5M GRAY	240 AU	1
60000500	240AF 2.5M GRAY	240 AF	1
60000600	SVT 18AWGx3 2.5M B	JAM	1
60000900	SEV 2.5M GRAY	220 SE	1
60001300	KP4819D 3x0.75 2.5M G	220 FR	1
	CONNECTION CORD		
60201300	NEW 6.3ϕ PLUG		1
	ADAPTER		
60201700	6.3ϕ JACK-MIN PLUG		1
	SLIDE SW KNOB		
62001600	SSB L=6 BLACK		3
	JOYSTICK LEVER KNOB		
62005301	KOC-E40127		1
	ROTARY VR KNOB		
62009501	NO5 E40087		5
	TACT SW KNOB A		
62011300	KOC-E30042		10
	TACT SW KNOB B IVORY		
62011400	E30043-1		6
	TACT SW B RED		
62011401	E30043-2		1
	JOYSTICK Y SUPPORT		
64058400	C40446		1
	FIXED PIN FOR JOYSTICK		
64058402	C40447		2

PART CODE	PART NAME SPECIFICATIONS	P.C. BOARD	Q'TY
	PHONE JACK PLATE		
64058500	KOC-C30205		1
	PANEL		
64058600	KOC-C20124		1
	WOODEN CASE		
64508400	KOC-D10014		1
	CORD STOPPER		
64608601	KOC-E40099		2
	LED COVER		
64609701	KOC-E40129		1
	TACT SW ESCUTCHEON		
64609800	KOC-E20047		2
64609801	KOC-E20048		2
64609802	KOC-E20049		1
64609803	KOC-E20050		1
	CONTROL PANEL		
64609900	KOC-E20040		1
	JOYSTICK BOX		
64610100	KOC-E30036		1
	JOYSTICK X SUPPORT		
64610101	KOC-E40114		1
	JOYSTICK LEVER		
64610102	KOC-E40113		1

7. SETTING CHARTS

The adjustment procedure in this service manual is in good accordance with this setting chart.

	11	12	13	21	22	23	24	31	32	33	34	41	42	43	44	51	61	62	63	64
11	8	1	0	8	0	1	1	63	0	0	0	0	0	15	0	1	9	0	0	0
12	16	1	0	8	0	1	1	63	0	0	0	0	0	15	0	1	9	0	0	0
13	8	1	0	8	0	1	1	63	0	0	0	0	0	15	0	1	9	0	0	0
14	4	1	0	8	0	1	1	63	0	0	0	0	0	15	0	1	9	0	0	0
15	8	2	0	8	0	1	1	63	0	0	0	0	0	15	0	1	9	0	0	0
16	8	3	0	8	0	1	1	63	0	0	0	0	0	15	0	1	0	0	0	0
17	8	3	0	16	1	1	1	63	0	0	0	0	0	15	0	1	0	0	0	0
18	8	3	0	8	1	1	1	63	0	0	0	0	0	15	0	1	0	0	0	0
21	8	3	0	1	1	1	1	63	0	0	0	0	0	15	0	1	0	0	0	0
22	8	3	0	16	2	1	1	63	0	0	0	0	0	15	0	1	0	0	0	0
23	8	3	0	8	2	1	1	63	0	0	0	0	0	15	0	1	0	0	0	0
24	8	3	0	4	2	1	1	63	0	0	0	0	0	15	0	1	0	0	0	0
25	8	3	0	4	2	3	1	63	0	0	0	0	0	15	0	1	0	0	0	0
26	8	3	0	4	2	3	1	63	0	0	0	0	0	15	0	1	0	0	0	0
27	8	3	0	4	2	4	1	63	0	0	0	0	0	15	0	1	0	0	0	0
28	8	3	0	4	2	5	1	63	0	0	0	0	0	15	0	1	0	0	0	0
31	8	2	0	8	1	1	1	63	0	0	0	0	0	15	0	1	0	0	0	0
32	8	2	0	8	0	1	1	63	0	0	0	0	0	15	0	1	0	0	0	0
33	8	2	0	8	0	1	1	44	0	0	0	0	0	15	0	1	0	0	0	0
34	8	2	0	8	0	1	1	44	2	0	0	0	0	15	0	1	0	0	0	0
35	8	2	0	8	0	1	1	44	4	0	0	0	0	15	0	1	0	0	0	0
36	8	2	0	8	0	1	1	44	6	0	0	0	0	15	0	1	0	0	0	0
37	8	2	0	8	0	1	1	44	7	0	0	0	0	15	0	1	0	0	0	0
38	8	2	0	8	0	1	1	32	6	0	0	0	0	15	0	1	0	0	0	0
41	8	2	0	8	0	1	1	63	6	0	0	0	0	15	0	1	0	0	0	0
42	16	2	0	8	0	1	1	63	6	0	0	0	0	15	0	1	0	0	0	0
43	8	2	0	8	0	1	1	41	6	1	0	0	0	15	0	1	0	0	0	0
44	8	2	0	8	0	1	1	56	6	0	1	0	0	15	0	1	0	0	0	0
45	8	2	0	8	0	1	1	48	6	0	2	0	0	15	0	1	0	0	0	0
46	8	2	0	8	0	1	1	43	6	0	3	0	0	15	0	1	0	0	0	0
47	8	2	0	8	0	1	1	34	6	0	4	0	0	15	0	1	0	0	0	0
48	8	2	0	8	0	1	1	28	6	0	5	0	0	15	0	1	0	0	0	0

63	64
0	0
0	0
0	0
0	0
0	0
0	0
0	0
0	0
0	0
0	0
0	0
0	0
0	0
0	0
0	0
0	0
0	0
0	0
0	0
0	0
0	0
0	0
0	0
0	0
0	0
0	0
0	0
0	0
0	0
0	0
0	0
0	0

	11	12	13	21	22	23	24	31	32	33	34	41	42	43	44	51	61	62	63	64
51	8	2	0	8	0	1	1	21	6	0	6	0	0	15	0	1	0	0	0	0
52	8	2	0	8	0	1	1	16	6	0	7	0	0	15	0	1	0	0	0	0
53	8	1	0	8	0	1	1	63	0	0	0	10	10	7	10	1	0	0	0	0
54	8	1	0	8	0	1	1	63	0	0	0	10	0	0	0	1	0	0	0	0
55	8	1	0	8	0	1	1	63	0	0	0	15	0	0	0	1	0	0	0	0
56	8	1	0	8	0	1	1	63	0	0	0	0	15	0	0	1	0	0	0	0
57	8	1	0	8	0	1	1	63	0	0	0	0	0	1	0	1	0	0	0	0
58	8	1	0	8	0	1	1	63	0	0	0	0	0	5	0	1	0	0	0	0
61	8	1	0	8	0	1	1	63	0	0	0	0	0	10	0	1	0	0	0	0
62	8	1	0	8	0	1	1	63	0	0	0	10	0	15	0	1	0	0	0	0
63	8	1	0	8	0	1	1	63	0	0	0	0	0	15	15	1	0	0	0	0
64	8	1	0	8	0	1	1	63	0	0	0	0	0	15	7	1	0	0	0	0
65	8	2	0	8	0	1	1	63	0	0	0	0	0	15	7	1	0	0	0	0
66	8	2	0	8	1	1	1	63	0	0	0	0	0	15	7	1	0	0	0	0
67	8	1	0	8	0	1	1	63	0	0	0	0	0	15	0	1	0	0	0	0
68	8	1	0	8	0	1	1	63	0	0	0	0	0	15	0	1	3	0	1	0
71	8	1	0	8	0	1	1	63	0	0	0	0	0	15	0	1	3	0	3	0
72	8	1	0	8	0	1	1	63	0	0	0	0	0	15	0	1	3	0	5	0
73	8	1	0	8	0	1	1	63	0	0	0	0	0	15	0	1	0	0	7	0
74	8	2	0	8	0	1	1	48	6	0	0	0	0	15	0	1	5	0	0	1
75	8	2	0	8	0	1	1	48	6	0	0	0	0	15	0	1	5	0	0	3
76	8	2	0	8	0	1	1	48	6	0	0	0	0	15	0	1	5	0	0	5
77	8	2	0	8	0	1	1	48	6	0	0	0	0	15	0	1	5	0	0	7
78	8	2	0	8	0	1	1	48	6	0	0	0	0	15	0	1	5	0	0	0
81	8	2	0	8	0	1	1	18	0	0	0	0	0	15	0	1	15	0	0	7
82	8	2	0	8	0	1	1	18	0	0	0	0	0	15	0	1	11	0	0	7
83	8	2	0	8	0	1	1	18	0	0	0	0	0	15	0	1	7	0	0	7
84	8	2	0	8	0	1	1	18	0	0	0	0	0	15	0	1	3	0	0	7
85	8	2	0	8	0	1	1	8	0	0	0	0	0	15	0	1	0	0	0	7
86	8	2	0	8	0	1	1	23	0	0	0	0	0	15	0	1	15	0	0	7
87	8	2	0	8	0	1	1	23	0	0	0	0	0	15	0	1	15	1	0	7
88	8	2	0	8	0	1	1	23	0	0	0	0	0	15	0	1	15	3	0	7